Available at
www.ComputerScienceWeb.com
POWERED BY SCIENCE DIRECT®

Computational Geometry 25 (2003) 197–231

Computational Geometry
Theory and Applications

www.elsevier.com/locate/comgeo

On the average complexity of 3D-Voronoi diagrams of random points on convex polytopes ☆

Mordecai J. Golin [a], Hyeon-Suk Na [b]

[a] *Department of Computer Science, Hong Kong Univ. of Sci. & Technology, Kowloon, Hong Kong*
[b] *Department of Mathematics, Pohang University of Science and Technology, Pohang, South Korea*

Received 1 August 2001; accepted 23 January 2002

Communicated by J.D. Boissonnat

Abstract

It is well known that the complexity, i.e. the number of vertices, edges and faces, of the 3-dimensional Voronoi diagram of n points can be as bad as $\Theta(n^2)$. It is also known that if the points are chosen Independently Identically Distributed uniformly from a 3-dimensional region such as a cube or sphere, then the *expected* complexity falls to $O(n)$. In this paper we introduce the problem of analyzing what occurs if the points are chosen from a 2-dimensional region in 3-dimensional space. As an example, we examine the situation when the points are drawn from a Poisson distribution with rate n on the *surface* of a convex polytope. We prove that, in this case, the expected complexity of the resulting Voronoi diagram is $O(n)$.
© 2003 Elsevier Science B.V. All rights reserved.

Keywords: Voronoi diagrams; Convex polytopes; Random points; Average case analysis

1. Introduction

Given a set $S_n = \{p_1, p_2, \ldots, p_n\} \subseteq \mathbb{R}^k$ of n points in k-dimensional Euclidean space, the *Voronoi Diagram*, $\mathrm{VD}(S_n)$, of S_n is a very well understood subdivision of $\mathbb{R}^k$. For each point $p_i \in S_n$ there is an associated (convex) cell

$$C_i = \left\{x \in \mathbb{R}^k\colon \forall j \neq i,\ d(x, p_i) \leqslant d(x, p_j)\right\},$$

where $d(\cdot,\cdot)$ is the Euclidean distance function. By definition these cells partition $\mathbb{R}^k$. The *complexity* of $\mathrm{VD}(S_n)$ is the number of lower dimensional pieces that compose $\mathrm{VD}(S_n)$. For example, in the planar case,

☆ The work of both authors was partially supported by HK RGC CERG grants 6082/97E, 6137/98E and 6206/02E.
E-mail addresses: golin@cs.ust.hk (M.J. Golin), hsnaa@postech.ac.kr (H.-S. Na).

0925-7721/03/$ – see front matter © 2003 Elsevier Science B.V. All rights reserved.
doi:10.1016/S0925-7721(02)00123-2

$k = 2$, $\mathrm{VD}(S_n)$ contains edges $\mathcal{E}$ and vertices $\mathcal{V}$. The complexity of $\mathrm{VD}(S_n)$ will be $|\mathrm{VD}(S_n)| = |\mathcal{E}| + |\mathcal{V}|$. Since it is also known that the 2-dimensional Voronoi Diagram is a planar graph, Euler's theorem immediately implies that $|\mathrm{VD}(S_n)| = \Theta(n)$ [11].

If $k = 3$ then $\mathrm{VD}(S_n)$ is composed not only of edges $\mathcal{E}$ and vertices $\mathcal{V}$ but also of the faces $\mathcal{F}$ of the convex cells. The complexity of $\mathrm{VD}(S_n)$ will then be $|\mathrm{VD}(S_n)| = |\mathcal{E}| + |\mathcal{V}| + |\mathcal{F}|$. In three dimensions it can be proven that $|\mathrm{VD}(S_n)| = \mathrm{O}(n^2)$. For some cases, such as when all of the points in S_n are on the *moment curve* $\{(t, t^2, t^3)\colon\ t \in \mathbb{R}\}$, it can be easily proven that $|\mathcal{V}| = \Theta(n^2)$ so $|\mathrm{VD}(S_n)| = \Theta(n^2)$ [7]. Another well known example of this worst-case behavior is built around two line segments $L_1 = \{(x, 0, 0)\colon\ x \in [0, \frac{1}{2}]\}$ and $L_2 = \{(1, y, 1)\colon\ y \in [\frac{1}{2}, 1]\}$; given any n_1 points on L_1 and any n_2 points on L_2, $|\mathcal{V}| = \Theta(n_1 n_2)$. In particular if $n_1 = n_2 = \frac{n}{2}$ then $|\mathcal{V}| = \Theta(n^2)$.

Moving away from worst-case behavior to average-case behavior it has been shown that if n points of S_n are independently identically distributed (IID) chosen from the uniform distribution over a "reasonably" smooth full dimensional bounded region $\mathcal{P}$ such as a cube or sphere then $E(|\mathrm{VD}(S_n)|) = \Theta(n)$ [4–6].[1]

Dropping the condition that $\mathcal{P}$ has full dimensionality dramatically changes the situation. For example, if we set $\mathcal{P} = L_1 \cup L_2$ to be the union of the two 1-dimensional segments previously defined and choose n points S_n uniformly at 'random' from $\mathcal{P}$ then $n_1 = |S_n \cap L_1|$, the number of points on L_1, is a binomial random variable with parameters $n, \frac{1}{2}$, so $E(n_1) = \frac{n}{2}$ and $E(n_1^2) \sim \frac{n^2}{4}$. Since $n_2 = |S_n \cap L_2| = n - n_1$ and $\mathcal{V} = \Theta(n_1 n_2)$ we have that

$$E\big(|\mathcal{V}|\big) = \Theta\big(E\big(n_1(n - n_1)\big)\big) = \Theta\big(n^2\big)$$

and $E(|\mathrm{VD}(S_n)|) = \Theta(n^2)$.

Combining the two previous paragraphs we see that, in 3-dimensional space, if n points S_n are chosen IID uniformly from $\mathcal{P}$ where $\mathcal{P}$ is a reasonably smooth 3-dimensional region then $E(|\mathrm{VD}(S_n)|) = \Theta(n)$ while for some 1-dimensional $\mathcal{P}$s, $E(|\mathrm{VD}(S_n)|) = \Theta(n^2)$. The obvious question then is what happens if $\mathcal{P}$ is a 2-*dimensional* surface in 3-dimensional space and n points S_n are chosen IID uniformly from it. What will be the expected complexity $E(|\mathrm{VD}(S_n)|)$ of the 3-dimensional Voronoi diagram of those points? $\Theta(n^2)$? $\Theta(n)$? Something in between?

The problem of understanding the structure of the 3-dimensional Voronoi diagram of point sets from 2-dimensional surfaces has started to be of interest in recent years. This is because, as described in [1] and [8], Voronoi diagrams and their duals, the Delaunay triangulation, are of use in several geometric problems, e.g. surface reconstruction, mesh generation and surface modeling. In these problems a 2-dimensional surface is often sampled and then modeled, at least initially, by the Delaunay triangulation of the sample. Many parameters of such algorithms such as their running times and the complexity of their representations, then depend upon the complexity of the Delaunay triangulation (which is the same as that of the Voronoi diagram).

The two results [1] and [8] mentioned above seem to be the first to try and formally analyze the complexity of such Voronoi diagrams. In [1] Attali and Boissonnat prove that if n "well-sampled" points

[1] These references don't exactly state this fact but it can be inferred from the general techniques developed there. The idea behind the proof is that points p_i *inside* $\mathcal{P}$ only have a constant number of Voronoi *neighbors* so their Voronoi cells C_i will have constant complexity. Points near the boundary of $\mathcal{P}$ might have Voronoi cells with high complexity but there are only a small number of such boundary cells.

are chosen from a "smooth" closed surface then the complexity of their Voronoi diagram is $O(n^{7/4})$ where "well-sampled" is defined using the concept of local feature size.[2]

In [8] Erickson proves that there is a set of n "well-sampled" points from the cylinder with Voronoi diagram complexity $\Omega(n^{3/2})$.

There does not, though, seem to be any previous work on analyzing the *expected* complexity of the Voronoi Diagram when the points are chosen randomly from some 2-dimensional surface. In this paper we make a first step towards answering this question by looking at random points chosen from the boundary of a convex polytope in $\mathbb{R}^3$. More specifically we prove

Theorem 1. *Let $\mathcal{P}$ be the boundary of a convex polytope in $\mathbb{R}^3$. Let S_n be a set of points drawn from the standard 2-dimensional Poisson distribution on $\mathcal{P}$ with rate n. Then $E(|\mathrm{VD}(S_n)|) = \Theta(n)$.*

The Poisson distribution on $\mathcal{P}$ with rate n [9] is the one that has the properties

- If $M \subseteq \mathcal{P}$ is any measurable region let $N(M)$ be the random variable signifying the number of points the process generates in M (the dependence upon n is implicit). Then
$$\Pr\big(N(M) = k\big) = \frac{(n\,\mathrm{Area}(M))^k \mathrm{e}^{-(n\,\mathrm{Area}(M))}}{k!} \tag{1}$$
(so $E(N(M)) = n\,\mathrm{Area}(M)$).
- If M_1 and M_2 are non-overlapping regions, then $N(M_1)$ and $N(M_2)$ are independent random variables.

We note that we have restricted ourselves to proving Theorem 1 for a Poisson distribution because its mathematics are a bit cleaner (it allows us to assume that points in various regions are chosen independently of each other) but standard modifications allow the proof to also work for n points chosen IID from the uniform distribution over $\mathcal{P}$ and show, in this case as well, that $E(|\mathrm{VD}(S_n)|) = \Theta(n)$.

To get a feeling for the type of problem we are analyzing, consider the box B with diagonal corners $(0, 0, 0)$ and $(3, 3, 1)$. In Fig. 1 we see 9000 points chosen randomly IID from the uniform distribution over the surface of the box and the 24943 Voronoi vertices that correspond to them (we do not draw the full Voronoi diagram since such a large diagram would be impossible to view properly). Note that most of the Voronoi vertices are *inside* B with only a small fraction being outside the box. In our proof of Theorem 1 we will see why this happens.[3]

In Section 2 we sketch the idea behind our proof and show how solving two smaller more specific subproblems would prove Theorem 1. In Section 3 we introduce definitions and utility lemmas that will be used throughout the rest of the paper. In Sections 4 and 5 we solve the two smaller subproblems introduced in Section 2. In Section 6 we review our work and discuss extensions and open problems.

[2] Just prior to submission we learned of new work [2] by Attali and Boissonnat that proves a linear bound on the complexity of the Delaunay Triangulation of n points well-sampled from a polyhedral surface (using a different definition of well-sampled).

[3] Essentially, as can be seen in the middle figures of Fig. 1, the vast majority of the Voronoi vertices cluster "near" the *Medial axis* of B. This observation provides good intuition as to what is occurring. The reason that we did not use this approach explicitly in our analysis is that it is quite difficult to formalize a good definition of "near". We discuss medial axis approaches in greater detail in the concluding section of this paper.

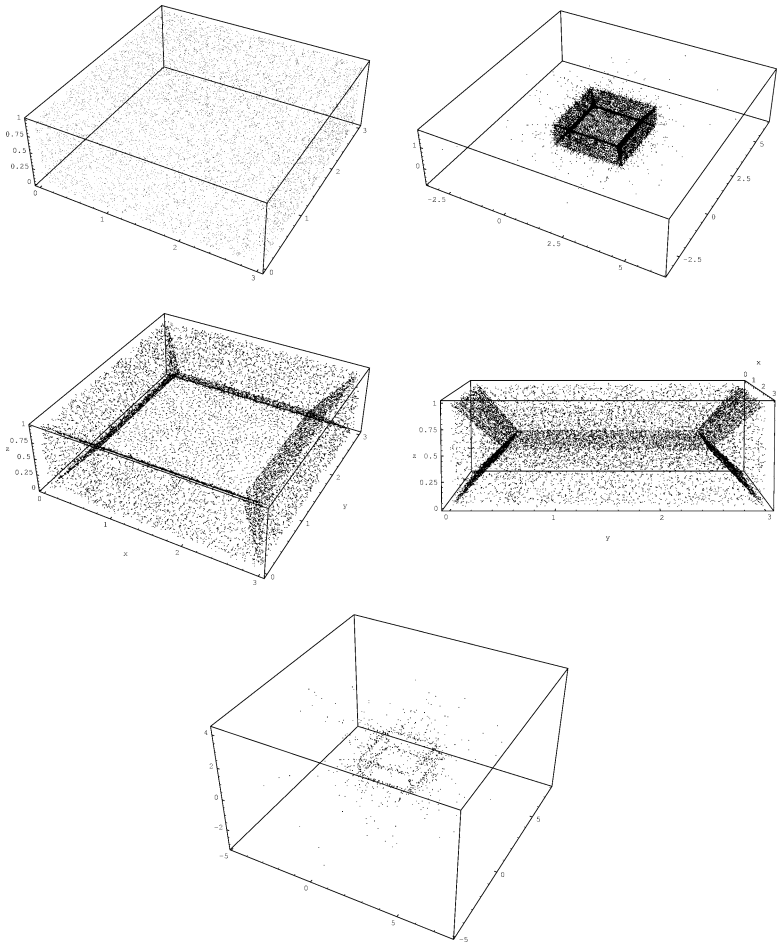

Fig. 1. Top-Left: 9000 random points chosen from the surface of box B. Top-Right: the 24943 Voronoi vertices of the points. Middle: the 23455 Voronoi vertices inside B viewed from different view points; Bottom: the 1488 Voronoi vertices outside B. Note that the scales on the different figures are not the same.

Note. Two of the proofs of lemmas in Section 5 require relatively straightforward but quite long case-by-case analyses of the different ways in which spheres can intersect the boundaries of convex polytopes. These analyses, while necessary to validate the results, are quite intuitive and do not provide anything new in the way of techniques or ideas and have therefore been omitted from this paper. They are available in their entirety, though, in [10].

2. A sketch of the proof

In what follows $\mathcal{P}$ will be the boundary of a given convex polytope and S_n will be a set of points drawn from the 2-dimensional Poisson distribution on $\mathcal{P}$ with rate n.

For a point $p \in \mathbb{R}^3$ and any closed or finite set $X \subseteq \mathbb{R}^3$, we extend the Euclidean distance function so that $d(p, X) = \min_{q \in X} d(p, q)$. Now define

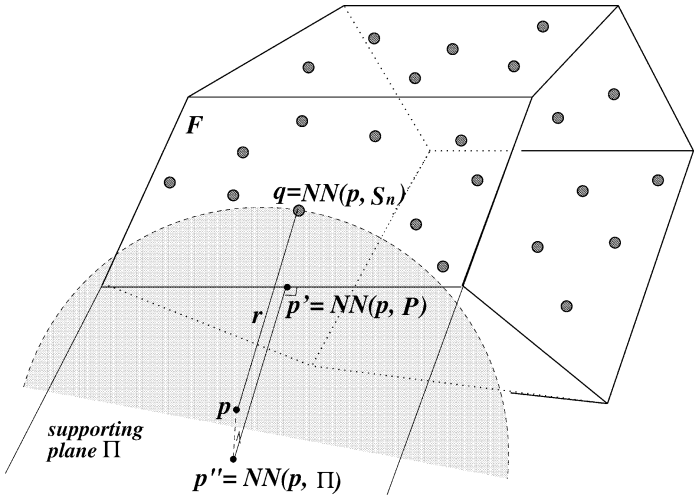

Fig. 2. Notations: p is outside polytope $\mathcal{P}$. q is a defining point of the Voronoi sphere $S(p,r)$. Note that $q = \mathrm{NN}(p, S_n)$ is different from $p' = \mathrm{NN}(p, \mathcal{P})$ and from $p'' = \mathrm{NN}(p, \Pi)$.

Definition 1. Let $p \in \mathbb{R}^3$, $X \subseteq \mathbb{R}^3$ and $r \geqslant 0$:

- $S(p,r) = \{q \in \mathbb{R}^3\colon d(q,p) \leqslant r\}$ is the closed ball of radius r around p. We call this a *sphere*.
- For point $p \in \mathbb{R}^3$, $\mathrm{NN}(p, X)$ will denote a nearest neighbor q to p in X, i.e., a $q \in X$ such that

  $$\forall q' \in X, \quad d(p,q) \leqslant d(p,q').$$

  In this paper all of the sets X used will either be finite or closed. Thus such a q will always exist although it might not always be unique.
- $S = S(p,r)$ is called *Voronoi sphere* of S_n if it contains no points of S_n in the interior and at least one point of S_n, e.g. $\mathrm{NN}(p, S_n)$, on its boundary. We will call the points of S_n on S's boundary the *defining* points of S. See Fig. 2.

Every vertex/edge/face/region of $\mathrm{VD}(S_n)$ corresponds to at least one Voronoi sphere with at least 4/3/2/1 defining points of S_n on its boundary. Since the event of points in a S_n chosen from the Poisson distribution being in general position has probability 1, we can assume that every vertex/edge/face/region of $\mathrm{VD}(S_n)$ corresponds to Voronoi sphere S with 4/3/2/1 defining points of S_n on its boundary. Two Voronoi spheres will correspond to the same vertex/edge/face/region of $\mathrm{VD}(S_n)$ if they have the exact same set of defining points. Therefore our strategy for bounding the complexity of $\mathrm{VD}(S_n)$ will be to bound the number of *combinatorially different* Voronoi spheres.

Furthermore, as recently pointed out by Attali and Boissonnat [2], Euler's relations imply that the number of tetrahedra and faces in the 3-D Delaunay triangulation of n sites are linear in the number of edges in this triangulation; by taking the dual we have that the number of Voronoi vertices and edges in the 3-D Voronoi diagram are actually linear in the number of Voronoi faces. So, the size of $\mathrm{VD}(P_n)$ is bounded by the number of Voronoi spheres defining Voronoi faces, i.e. the Voronoi spheres defined by exactly two points.

To simplify matters, in the rest of this paper, we will therefore assume that $\mathrm{VD}(S_n)$ is not the full set of Voronoi spheres but only those corresponding to Voronoi faces, i.e. those defined by two points in S_n.

We now make explicit the connections between physical (Voronoi) spheres and combinatorial (Voronoi) spheres.

Definition 2. Let $p_1, p_2 \in \mathbb{R}^3$. Set

$$\mathcal{X}(p_1, p_2) = \{S(p,r)\colon\ p \in \mathbb{R}^3,\ r \in \mathbb{R}^+,\ d(p,p_1) = d(p,p_2) = r\}$$

to be the set of all physical spheres with p_1, p_2 on their boundaries. We refer to $\mathcal{X}(p_1, p_2)$ as a *combinatorial sphere*. Now set

$$\mathcal{F}(p_1, p_2) = \{S(p,r)\colon\ S(p,r) \in \mathcal{X}(p_1, p_2) \text{ and } S(p,r)\text{'s interior contains no points in } S_n\}.$$

For $p_1, p_2 \in S_n$, $\mathcal{X}(p_1, p_2)$ is a combinatorial *Voronoi sphere* if $\mathcal{F}(p_1, p_2) \neq \emptyset$, i.e., if there exists some physical Voronoi sphere $S(p,r)$ with p_1, p_2 on its boundary whose interior contains no points in S_n.

We will also need the following definition:

Definition 3. Let $\mathcal{P}$ be the boundary of a convex polytope. A physical sphere S in $\mathbb{R}^3$ is *x-bad* (with respect to $\mathcal{P}$) if

$$\text{Area}(S \cap \mathcal{P}) \geqslant x^2.$$

A physical sphere S in $\mathbb{R}^3$ is *x-good* (with respect to $\mathcal{P}$) if it is not *x-bad*.

We now extend this definition to combinatorial spheres:

Definition 4. Let $p_1, p_2 \in S_n$. $\mathcal{X}(p_1, p_2)$ is an *x-bad* combinatorial sphere (with respect to $\mathcal{P}$) if *every* physical sphere $S(p,r) \in \mathcal{X}(p_1, p_2)$ is an *x-bad* sphere.

$\mathcal{X}(p_1, p_2)$ is an *x-good* combinatorial sphere (with respect to $\mathcal{P}$) if it is not an *x-bad*.

Now assume that $\mathcal{X}(p_1, p_2)$ is a *combinatorial* Voronoi sphere. $\mathcal{X}(p_1, p_2)$ is an *x-bad* combinatorial Voronoi sphere (with respect to $\mathcal{P}$) if *every* physical sphere $S(p,r) \in \mathcal{F}(p_1, p_2)$ is *x-bad*, i.e., every empty sphere with p_1, p_2 on its boundary is *x-bad*.

$\mathcal{X}(p_1, p_2)$ is an *x-good* combinatorial Voronoi sphere (with respect to $\mathcal{P}$) if it is not an *x-bad* combinatorial Voronoi sphere.

The intuition here is that $\mathcal{X}(p_1, p_2)$ is an *x-good* combinatorial Voronoi sphere if and only if there exists some *x-good* physical Voronoi sphere with p_1, p_2 on its boundary. Note that the definitions imply that if $\mathcal{X}(p_1, p_2)$ is an *x-good* combinatorial Voronoi sphere then it is an *x-good* combinatorial sphere (but not vice-versa).

The reason for introducing these definitions is the following lemma:

Lemma 1. *Let S_n be a set of points chosen from the standard 2-dimensional Poisson distribution on $\mathcal{P}$ with rate n. Then*

$$\Pr\left(\text{there exists a } \tfrac{\log n}{\sqrt{n}}\text{-}\textit{bad} \text{ combinatorial Voronoi sphere of } S_n\right) = n^{-\Omega(\log n)}.$$

The proof of this lemma can be found in Appendix A.

We need one more set of definitions before presenting our sketch proof of Theorem 1.

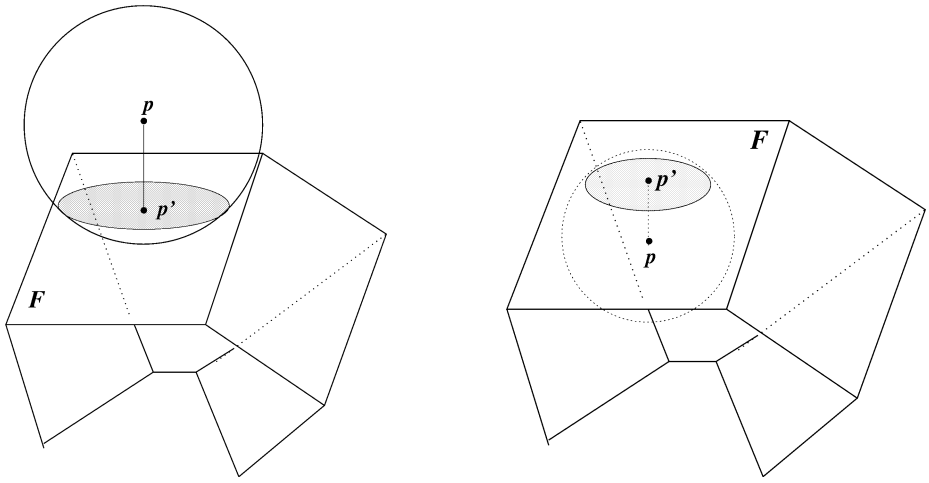

(a) p is outside $\mathcal{P}$ (b) p is inside $\mathcal{P}$

Fig. 3. Type-I spheres.

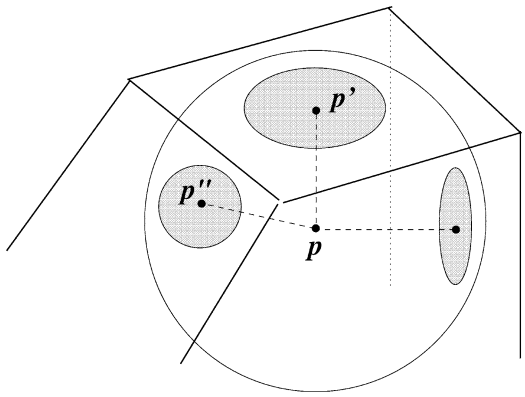

Fig. 4. An example of a Type-II sphere. p, the center of the sphere, is inside polytope $\mathcal{P}$ (for clarity many of the faces of $\mathcal{P}$ have been left out of the diagram). For all the faces F_i of $\mathcal{P}$ that the sphere intersects, the center of the intersection disk with the supporting plane Π_i is on F_i.

Definition 5. Let $\mathcal{P}$ be a convex polytope and $S = S(p, r)$ a physical sphere. S will be a Type-I, Type-II or Type-III sphere if S contains at least one point of S_n on its boundary and:

- S is a *Type-I* sphere if $\exists$ a face F of $\mathcal{P}$ such that $S \cap \mathcal{P} \subseteq F$ (Fig. 3).
- S is a *Type-II* sphere if (i) it is not a Type-I sphere, (ii) p is *inside* $\mathcal{P}$ and (iii) for every face F_i of $\mathcal{P}$ with corresponding supporting plane Π_i, if $S \cap F_i \neq \emptyset$ then $\mathrm{NN}(p, \Pi_i) \in F_i$ (Fig. 4).
- If S is not a Type-I or Type-II sphere then S is a *Type-III* sphere.

(The *supporting plane* of a face F is the infinite plane Π that contains F.)

Type-I spheres are easily understood. If p is inside $\mathcal{P}$ and S is not a Type-I sphere, then S is a Type-II sphere if, for every face F_i of $\mathcal{P}$ that S intersects, the center of the disk formed by $S \cap \Pi_i$ is in F_i. Type-III spheres are catch-alls that cover every other case.

We will say that a combinatorial sphere $\mathcal{X}(p_1, p_2)$ is a Type-α sphere ($\alpha \in \{\mathrm{I}, \mathrm{II}, \mathrm{III}\}$) if there is some physical $S(p, r) \in \mathcal{X}(p_1, p_2)$ such that $S(p, r)$ is a Type-α sphere. Note that, by this definition, a combinatorial sphere $\mathcal{X}(p_1, p_2)$ is not restricted to being of only one type. It can simultaneously be of two, or even all three, types.

Similarly, we will say that a combinatorial sphere $\mathcal{X}(p_1, p_2)$ is a Type-α *Voronoi* sphere if there is some physical Voronoi sphere $S(p, r) \in \mathcal{F}(p_1, p_2)$ such that $S(p, r)$ is a Type-α sphere. Note that a Type-α combinatorial Voronoi sphere is a Type-α combinatorial sphere.

We will now sketch the proof technique; it is to count the number of *combinatorial* Voronoi spheres. Splitting cases we find (until otherwise stated "sphere" denotes a combinatorial sphere)

$$\begin{aligned}
&\text{No. of Voronoi spheres}\\
&\quad = \text{No. of } \tfrac{\log n}{\sqrt{n}}\text{-bad Voronoi spheres} + \text{No. of } \tfrac{\log n}{\sqrt{n}}\text{-good Voronoi spheres}\\
&\quad \leqslant \text{No. of } \tfrac{\log n}{\sqrt{n}}\text{-bad V. spheres} + \text{No. of } \tfrac{\log n}{\sqrt{n}}\text{-good Type-I V. spheres}\\
&\qquad + \text{No. of } \tfrac{\log n}{\sqrt{n}}\text{-good Type-II V. spheres} + \text{No. of } \tfrac{\log n}{\sqrt{n}}\text{-good Type-III V. spheres}\\
&\quad \leqslant \text{No. of } \tfrac{\log n}{\sqrt{n}}\text{-bad V. spheres} + \text{No. of Type-I V. spheres}\\
&\qquad + \text{No. of Type-II V. spheres} + \text{No. of } \tfrac{\log n}{\sqrt{n}}\text{-good Type-III spheres}.
\end{aligned} \tag{2}$$

The remaining sections of this paper are devoted to proving:

$$E(\text{No. of } \tfrac{\log n}{\sqrt{n}}\text{-bad Voronoi spheres}) = \mathrm{o}(1). \tag{3}$$

$$E(\text{No. of Type-I Voronoi spheres}) = \mathrm{O}(n). \tag{4}$$

$$E(\text{No. of Type-II Voronoi spheres}) = \mathrm{O}(n). \tag{5}$$

$$E(\text{No. of } \tfrac{\log n}{\sqrt{n}}\text{-good Type-III spheres}) = \mathrm{o}(n). \tag{6}$$

Now, taking expectations of Eq. (2) gives

$$\begin{aligned}
E(\text{Number of Voronoi spheres}) \leqslant\ & E\big(\text{No. of } \tfrac{\log n}{\sqrt{n}}\text{-bad Voronoi spheres}\big)\\
&+ E(\text{No. of Type-I Voronoi spheres})\\
&+ E(\text{No. of Type-II Voronoi spheres})\\
&+ E\big(\text{No. of } \tfrac{\log n}{\sqrt{n}}\text{-good Type-III spheres}\big).
\end{aligned} \tag{7}$$

Plugging in (3)–(6) will then prove Theorem 1, that the expected number of Voronoi spheres, which is the same as the expected complexity of the Voronoi Diagram, will be $\mathrm{O}(n)$. The main reason that we use this decomposition into good and bad spheres is that it permits us to bound from above the number of $\frac{\log n}{\sqrt{n}}$-good Type-III *Voronoi* spheres by the number of $\frac{\log n}{\sqrt{n}}$-good Type-III spheres. Bounding the number of such *Voronoi* spheres would be quite difficult since assuming that a sphere is Voronoi, i.e. empty, requires conditioning that skews the rest of the point distribution, making it very difficult to count the number of other Voronoi spheres. Bounding the number of *good* spheres is much easier since it only requires calculating how many points could feasibly fall within a particular volume or area.

Proving (3) will be quite simple and we do that below; proving (5) and (6) will be more complicated and will require the remainder of this paper.

To prove (3) let $A = \sum_i \mathrm{Area}(F_i)$ be the total surface area of $\mathcal{P}$. Then $\Pr(|S_n| = k) = \frac{(An)^k}{k!}\mathrm{e}^{-An}$. Set X to be the number of $\frac{\log n}{\sqrt{n}}$-bad Voronoi spheres. Recall that, in the worst case, point set S_n defines at most $\mathrm{O}(|S_n|^2)$ Voronoi spheres. Thus

$$E(XI_{\{|S_n|>2An\}}) \leqslant \sum_{k>2An} \mathrm{O}\bigl(k^2\bigr)\frac{(An)^k}{k!}\mathrm{e}^{-An} = n^{-\Omega(\log n)} \tag{8}$$

where I_B is the indicator random variable for event B, i.e, $I_B = 1$ if B occurs and 0 otherwise. On the other hand, Lemma 1 states that the probability that there is a $\frac{\log n}{\sqrt{n}}$-bad Voronoi sphere is $n^{-\Omega(\log n)}$, so

$$E(XI_{\{|S_n|\leqslant 2An\}}) \leqslant \mathrm{O}\bigl(|2An|^2\bigr)\Pr(X > 0) = n^{-\Omega(\log n)}. \tag{9}$$

Combining (8) and (9) proves

$$\begin{aligned} E\bigl(\text{No. of } \tfrac{\log n}{\sqrt{n}}\text{-bad Voronoi spheres}\bigr) &= E(X) \\ &= E(XI_{\{|S_n|>2An\}}) + E(XI_{\{|S_n|\leqslant 2An\}}) \\ &= n^{-\Omega(\log n)}, \end{aligned}$$

and thus we have shown (3).

The proofs of (4), (5) and (6) will be based on the following idea: suppose we want to enumerate, for instance, the number of Type-II Voronoi spheres. Let $\mathcal{X}(p_1, p_2)$ be a Type-II Voronoi sphere. Then by the definition of Type-II combinatorial Voronoi sphere, $\exists$ physical sphere $S = S(p, r) \in \mathcal{X}(p_1, p_2)$ such that S is a Type-II physical Voronoi sphere with p_1, p_2 on its boundary. This means that the number of Type-II Voronoi spheres is bounded by the number of *combinatorially different physical* Type-II Voronoi spheres where two physical spheres are considered combinatorially different if and only if they have different set of defining points $p_1, p_2 \in S_n$.

So, in the proofs of (4), (5) and (6), we will now always deal with those specified physical spheres and will study how many combinatorially different physical spheres can exist. From now on, a "sphere" can denote either a combinatorial sphere or a physical sphere belonging to a combinatorial sphere (if not obvious from context we will specify which is which). "Counting spheres" will mean counting combinatorially different physical spheres.

Proving (4) is quite easy. From the definition of Type-I spheres we have that $S_n \cap S \subseteq F_i$ for some face F_i of $\mathcal{P}$. This means that S will be a Voronoi sphere of the *planar* Voronoi diagram of the points $S_n \cap F_i$ on the supporting plane Π_i of F_i. Since planar Voronoi diagrams of m points have complexity $\mathrm{O}(m)$, we immediately have that the total number of combinatorially different Type-I Voronoi spheres S intersecting face F_i (we no longer have to restrict ourselves to good ones), is $\mathrm{O}(|S_n \cap F_i|)$. Summing over all faces F_i gives that the total number of combinatorially different Type-I Voronoi spheres is $\mathrm{O}(\sum_i |S_n \cap F_i|) = \mathrm{O}(|S_n|)$. The expected number of Type-I Voronoi spheres is therefore $\mathrm{O}(E(|S_n|)) = \mathrm{O}(An) = \mathrm{O}(n)$ proving (4).

The remainder of this paper is devoted to proving (5) (in Section 4) and (6) (in Section 5) which will both require tedious case-by-case analysis:

To prove (5) the intuition is that for each Type-II Voronoi sphere $S = S(p, r)$, there exist two faces F_1, F_2 of $\mathcal{P}$ with corresponding supporting plane Π_1, Π_2 such that $\forall i = 1, 2$, $S \cap F_i \neq \emptyset$. Moreover, from the definition of Type-II sphere, we have that $\mathrm{NN}(p, \Pi_1) \in F_1$ and $\mathrm{NN}(p, \Pi_2) \in F_2$.

Therefore, given two faces F_{i_1}, F_{i_2} with corresponding supporting planes Π_{i_1}, Π_{i_2}, we essentially partition F_{i_1} up into small squares, each with area $\frac{1}{n}$. For each such square $B \subseteq F_{i_1}$, we calculate the expected number of combinatorially different Type-II Voronoi spheres $S = S(p, r)$ such that $\forall j = 1, 2,\ S \cap F_{i_j} \neq \emptyset$ and $\mathrm{NN}(p, \Pi_{i_1}) \in B$ and prove that this is $\mathrm{O}(1)$. Since there are only $\mathrm{O}(n)$ squares in the partition and $\mathrm{O}(1)$ pair of faces, this will prove (5).

To prove (6) the intuition is that we show that for any Type-III $\frac{\log n}{\sqrt{n}}$-good sphere centered at p there exists an associated region around the nearest point p' on the skeleton of $\mathcal{P}$ to p, call it $M(p')$, with area $\mathrm{O}(\log^3 n/n)$ such that the points in the $\frac{\log n}{\sqrt{n}}$-good sphere must be in $M(p')$. Thus the number of such spheres can be bounded by the number of pairs of points in $S_n \cap M(p')$ for the same p'. Summing this number over every segment of skeleton of $\mathcal{P}$ will prove (6).

3. Definitions and utility lemmas

In this section we introduce some basic definitions and utility lemmas that will be used in the rest of the paper.

We will often use the following basic properties of the Poisson distribution so we encapsulate them in two lemmas.

Lemma 2.

- *Let M, M' be measurable regions with $M' \subseteq M$, X a set of points drawn from the Poisson distribution with rate n over M and X' a set drawn from the Poisson distribution with rate n over M'. Then X' has the same distribution as $X \cap M'$.*
- *Let F be a convex polygon and S_n a set of points drawn from the Poisson distribution with rate n over F. The probability that four points in S_n are cocircular is* 0.
- *Let $\mathcal{P}$ be the boundary of a convex polytope and S_n a set of points drawn from the Poisson distribution with rate n over $\mathcal{P}$. The probability that five points in S_n are cospherical is* 0.

Lemma 3. *Let Z be any discrete Poisson distribution with any rate λ, i.e., $\forall k \geqslant 0$, $\Pr(Z = k) = \lambda^k \frac{\mathrm{e}^{-\lambda}}{k!}$. Then $E(Z) = \lambda$ and $\forall k > 1$, $\exists d_k$ independent of λ such that $E(Z^k) \leqslant d_k \lambda^k$. That is, $E(Z^k) \leqslant d_k (E(Z))^k$.*

We also strongly use the following geometric definitions:

Definition 6. Let Π be a plane in $\mathbb{R}^3$; C_Π, D°_Π and D_Π are the circle, open and closed disks

$$C_\Pi(p, r) = \{q \in \Pi\colon d(q, p) = r\}.$$
$$D^\circ_\Pi(p, r) = \{q \in \Pi\colon d(q, p) < r\}.$$
$$D_\Pi(p, r) = \{q \in \Pi\colon d(q, p) \leqslant r\} = C_\Pi(p, r) \cup D^\circ_\Pi(p, r).$$

Definition 7. Let $F \subseteq \mathbb{R}^3$ be a planar object in $\mathbb{R}^3$. Its *supporting plane* is the unique plane $\Pi \subset \mathbb{R}^3$ such that $F \subseteq \Pi$.

Definition 8. We also define the *skeleton* and *r-boundary* of $\mathcal{P}$:

$$\begin{aligned}\mathrm{Skel}(\mathcal{P}) &= \{u \in \mathcal{P}\colon u \text{ is on some edge of } \mathcal{P}\}\\ \mathrm{Bd}(r) &= \{u \in \mathcal{P}\colon \exists \text{ point } v \in \mathrm{Skel}(\mathcal{P}) \text{ such that } d(u,v) < r\}.\end{aligned}$$

Thus $\mathrm{Bd}(r)$ is the set of points on $\mathcal{P}$ within distance r of an edge or vertex of $\mathcal{P}$.

Finally, we will need the following basic geometric lemmas and definition in various places in the paper, so we state them here at the beginning:

Lemma 4. *Let F be a convex polygon and Π its supporting plane. Then there exist some constant σ, $K \geqslant 0$ dependent upon F such that*

- $\forall r \leqslant K,\ \forall p \in F,\ \mathrm{Area}(F \cap D_\Pi(p,r)) \geqslant \sigma r^2$.
- $\forall r \geqslant K,\ \forall p \in F,\ \mathrm{Area}(F \cap D_\Pi(p,r)) \geqslant \sigma K^2$.

The lemma permits us to introduce the following definition:

Definition 9. Let $\mathcal{P}$ be a convex polytope, $F_i,\ i = 1,\ldots,k$, its faces and $\Pi_i,\ i = 1,\ldots,k$, their respective supporting planes. Let σ_i and K_i be the σ and K associated with F_i in Lemma 4. Set

$$c_0 = \frac{1}{\sqrt{\min_i \sigma_i}}$$

and $K_0 = \min_i K_i$. We note that this directly implies that if $p \in F_i$ for some F_i then

$$\forall c_0 r \leqslant K_0, \quad \mathrm{Area}\big(F_i \cap D_{\Pi_i}(p, c_0 r)\big) \geqslant r^2.$$

Lemma 5.

(1) *Let $\mathcal{P}$ be the boundary of a convex polytope. There exists c_1, with $0 < c_1 < 1$, depending only upon $\mathcal{P}$ such that the following property holds for all $p' \in \mathcal{P} \setminus \mathrm{Skel}(\mathcal{P})$: Let F be the face of $\mathcal{P}$ such that $p' \in F$, Π its supporting plane and $r' = d(p', \mathrm{Skel}(\mathcal{P}))$. Then*

$$S(p', c_1 r') \cap \mathcal{P} \subseteq F.$$

Equivalently, the distance from p' to any other face of $\mathcal{P}$ is greater than $c_1 r'$.

(2) *Let $p' \in \mathcal{P} \setminus \mathrm{Skel}(\mathcal{P})$, F, Π and r' as defined above. Let p be any point outside $\mathcal{P}$ such that $\mathrm{NN}(p,\mathcal{P}) = p'$. Also let $r \geqslant d(p,p')$. Then the following is true: If $S(p,r) \cap \mathcal{P} \nsubseteq F$ then $D_\Pi(p', \frac{c_1 r'}{2}) \subseteq S(p,r) \cap F$.*

Proof. The proof of (1) is straightforward from the convexity of $\mathcal{P}$. To prove (2) suppose that $S(p,r) \cap \mathcal{P} \nsubseteq F$ but $D_\Pi(p', \frac{c_1 r'}{2}) \nsubseteq S(p,r) \cap \Pi$.

Since $p' \notin \mathrm{Skel}(\mathcal{P})$ and $p' = \mathrm{NN}(p,\mathcal{P})$, we have that $p' = \mathrm{NN}(p,\Pi)$ and $S(p,r) \cap \Pi = D_\Pi(p',\beta)$ for some β. Thus $D_\Pi(p', \frac{c_1 r'}{2}) \nsubseteq S(p,r) \cap \Pi$ means that $\frac{c_1 r'}{2} > \beta$.

Also, since $S(p,r) \cap \mathcal{P} \nsubseteq F$, $\exists q \in S(p,r) \cap \mathcal{P}$ such that $q \notin F$. By the convexity of $\mathcal{P}$ and the fact that $\mathrm{NN}(p,\mathcal{P}) \in \Pi$, we have that line segment pq intersects Π at some point, denoted q'. Then $q' \in S(p,r) \cap \Pi = D_\Pi(p',\beta)$. In particular, this means that $d(p',q') \leqslant \beta < \frac{c_1 r'}{2}$.

We will now also see that $d(q,q') \leqslant \frac{c_1 r'}{2}$. Suppose in contradiction that $d(q,q') > \frac{c_1 r'}{2}$. First note that because p, q and q' are collinear and $p' = \mathrm{NN}(p,\Pi)$,

$$r \geqslant d(p,q) = d(p,q') + d(q',q) > d(p,p') + \frac{c_1 r'}{2}.$$

This then implies that

$$D_\Pi\left(p', \frac{c_1 r'}{2}\right) \subseteq S(p,r) \cap \Pi = D_\Pi(p',\beta),$$

contradicting $\frac{c_1 r'}{2} > \beta$. So $d(q,q') \leqslant \frac{c_1 r'}{2}$.

Combining this with the previously proven $d(p',q') \leqslant \frac{c_1 r'}{2}$ yields that

$$d(p',q) \leqslant d(p',q') + d(q',q) \leqslant 2\frac{c_1 r'}{2} = c_1 r'.$$

But now part 1 of the lemma tells us that for such q, if $q \in \mathcal{P}$ then q must be on F, contradicting our assumption that $q \notin F$. Thus our original assumption must be incorrect and

$$D_\Pi\left(p', \frac{c_1 r'}{2}\right) \subseteq S(p,r) \cap \Pi.$$

Since part 1 also tells us that $D_\Pi(p', c_1 r') \subseteq F$, we have

$$D_\Pi\left(p', \frac{c_1 r'}{2}\right) \subseteq S(p,r) \cap F$$

and are done. □

4. Bounding the number of Type-II Voronoi spheres

In this section we will investigate the expected number of Type-II Voronoi spheres. Our goal will be to prove (5):

$$E(\text{Number of Type-II Voronoi spheres}) = \mathrm{O}(n).$$

Recall that a Voronoi sphere $S = S(p,r)$ of point set S_n has no points of S_n in its interior and two points on its boundary. S is Type-II if (i) p is inside $\mathcal{P}$ and (ii) for all faces F_i of $\mathcal{P}$, if $S \cap F_i \neq \emptyset$ then $\mathrm{NN}(p,\Pi_i) \in F_i$ where Π_i is the supporting plane of F_i. (See Fig. 4.)

Our proof will require flipping back and forth between different related distributions. To do this we will need to introduce some new definitions that generalize our old ones:

Definition 10. Let F_1, F_2 be two faces of $\mathcal{P}$ and Π_1, Π_2 their corresponding supporting planes.

(1) A Voronoi sphere $S(p,r)$ for a point set $X \subset \mathcal{P}$ is *Type-II* over F_1, F_2, if (i) p is inside $\mathcal{P}$ and (ii) $\forall i = 1,2,\ S \cap F_i \neq \emptyset$ and $\mathrm{NN}(p,\Pi_i) \in F_i$.
(2) $S_{F_1,F_2,n}$ is a set of points drawn from the 2-dimensional Poisson distribution with rate n on $F_1 \cup F_2$.
(3) $X_{F_1,F_2,n}$ is the set of Type-II Voronoi spheres for $S_{F_1,F_2,n}$ over F_1, F_2.

If $S(p,r) \in \mathcal{X}(p_1, p_2)$ is a Type-II Voronoi sphere, then $p_1, p_2 \in S_n$ are on the boundary of $S(p,r)$ and $S(p,r)$ contains no points of S_n in its interior. Thus, for every subset $S' \subset S_n$ with $p_1, p_2 \in S'$, $S(p,r)$ is also a Voronoi sphere for S'. Furthermore, if F_1 and F_2 are the faces of $\mathcal{P}$ such that $p_1 \in F_1$, $p_2 \in F_2$, then $S(p,r)$ is a Type-II Voronoi sphere over F_1, F_2 for $S_n \cap (F_1 \cup F_2)$. (Note that the converse is not necessarily true; $S(p,r)$ being a Voronoi sphere for $S_n \cap (F_1 \cup F_2)$ does not necessarily imply that $S(p,r)$ is a Voronoi sphere for S_n, and being Type-II over F_1, F_2 does not necessarily imply being Type-II over $\mathcal{P}$.)

By the standard property of the Poisson distribution (Lemma 2), the set of points $S_n \cap (F_1 \cup F_2)$ *has the same distribution* as $S_{F_1,F_2,n}$, so the expected number of Type-II Voronoi spheres for the point set $S_n \cap (F_1 \cup F_2)$ is equal to the expected number of Type-II Voronoi spheres for $S_{F_1,F_2,n}$.

Combining these observations and using linearity of expectation, we have just shown that if $F_1, F_2, \ldots, F_k$ is the set of faces of $\mathcal{P}$ then

$$E(\text{Number of Type-II Voronoi spheres}) \leqslant \sum_{1 \leqslant i_1 < i_2 \leqslant k} E\big(|X_{F_{i_1},F_{i_2},n}|\big). \tag{10}$$

The remainder of this section will be devoted to proving the following two lemmas.

Lemma 6. *Let F_1 and F_2 be two convex polygons in $\mathbb{R}^3$ and $\Pi_1 \parallel \Pi_2$ their respective supporting planes. Then $E(|X_{F_1,F_2,n}|) = \mathrm{O}(n)$.*

Lemma 7. *Let F_1 and F_2 be two convex polygons in $\mathbb{R}^3$ and $\Pi_1 \nparallel \Pi_2$ their respective supporting planes. Then $E(|X_{F_1,F_2,n}|) = \mathrm{O}(n)$.*

Note that applying these two lemmas to Eq. (10) proves (5) with some constant in the O() depending on the number of faces of $\mathcal{P}$.

In the next subsection we introduce some properties and prove a utility lemma. In the one following we return and prove Lemmas 6 and 7.

4.1. Useful properties and a utility lemma

We start with a definition and some properties:

Definition 11.

$$\Sigma(p,r) = \big\{q \in \mathbb{R}^3\colon\ d(q,p) = r\big\}$$

is the *sphere* of radius r around point p (to be distinguished from the *ball* $S(p,r)$ defined previously).

Property 1 [3]. *The* power of a point $\xi(x,y,z)$ with respect to a sphere $\Sigma = \Sigma(p,r)$ *is defined as the quantity $\rho(\xi,\Sigma) = d(\xi,p)^2 - r^2$. As its 2-dimensional analog, the power of a point $\xi(x,y)$ with respect to a circle $C = C(p,r)$ is defined by $\rho(\xi,C) = d(\xi,p)^2 - r^2$. The power of ξ with respect to a sphere $\Sigma(p,r)$ is equal to the power of ξ with respect to any circle obtained by intersecting the sphere with any plane containing ξ.*

Let Π_1 and Π_2 be planes such that $\Pi_1 \nparallel \Pi_2$. Given a sphere $\Sigma = \Sigma(p,r)$ with $\Sigma \cap \Pi_1 \neq \emptyset$ and $\Sigma \cap \Pi_2 \neq \emptyset$, let q, α, q', β be such that $C_{\Pi_1}(q,\alpha) = \Sigma \cap \Pi_1$ and $C_{\Pi_2}(q',\beta) = \Sigma \cap \Pi_2$. See Fig. 5(a). By Property 1, we have $\forall \xi \in \Pi_1 \cap \Pi_2$,

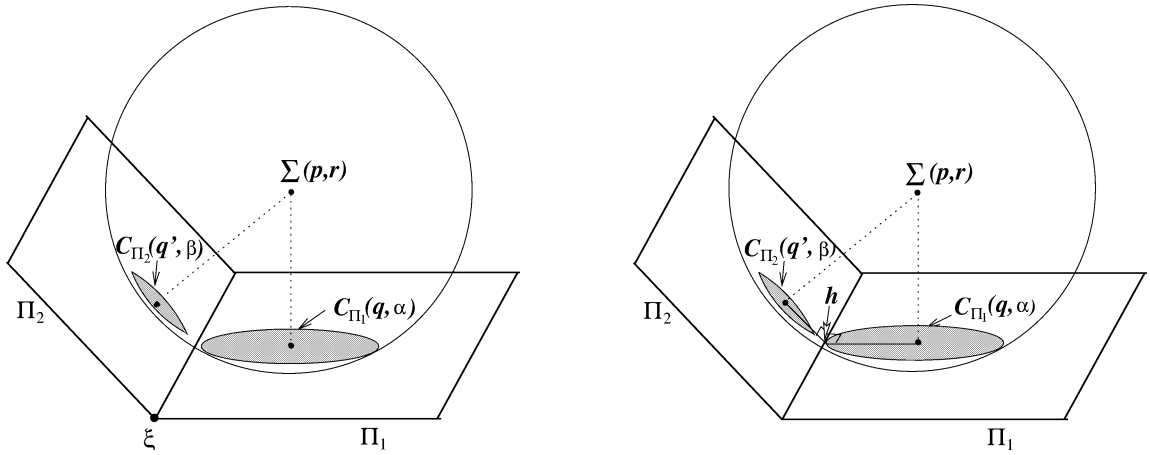

(a) $\rho(\xi, \Sigma(p,r)) = \rho(\xi, C_{\Pi_1}(q,\alpha)) = \rho(\xi, C_{\Pi_2}(q',\beta))$

(b) For the perpendicular h dropped from q onto $\Pi_1 \cap \Pi_2$, $q'h \perp (\Pi_1 \cap \Pi_2)$.

Fig. 5. Properties of the circles $C_{\Pi_1}(q,\alpha)$ and $C_{\Pi_2}(q',\beta)$, having a sphere $\Sigma = \Sigma(p,r)$ such that $\Sigma \cap \Pi_1 = C_{\Pi_1}(q,\alpha)$ and $\Sigma \cap \Pi_2 = C_{\Pi_2}(q',\beta)$.

$$\begin{aligned}\rho\big(\xi, \Sigma(p,r)\big) &= \rho\big(\xi, C_{\Pi_1}(q,\alpha)\big) = \rho\big(\xi, C_{\Pi_2}(q',\beta)\big)\\ &= d(\xi,q)^2 - \alpha^2 = d(\xi,q')^2 - \beta^2.\end{aligned}$$

Now let $C_{\Pi_1}(q,\alpha)$ be given. Let $\Sigma = \Sigma(p,r)$ be any sphere with $\Sigma \cap \Pi_1 = C_{\Pi_1}(q,\alpha)$ and q', β such that $\Sigma \cap \Pi_2 = C_{\Pi_2}(q',\beta)$. Let h be the perpendicular from q onto the line $\Pi_1 \cap \Pi_2$. Since $pq \perp \Pi_1$ and $qh \perp (\Pi_1 \cap \Pi_2)$, $ph \perp (\Pi_1 \cap \Pi_2)$. Also $pq' \perp \Pi_2$, so $ph \perp (\Pi_1 \cap \Pi_2)$ yielding $q'h \perp (\Pi_1 \cap \Pi_2)$, which means that q' must lie on the line of Π_2, passing through h and perpendicular to $\Pi_1 \cap \Pi_2$. See Fig. 5(b). Moreover, Property 1 yields the following condition for the radius, denoted β, of the disk $S \cap \Pi_2$:

$$\beta^2 = d(h,q')^2 - d(h,q)^2 + \alpha^2. \tag{11}$$

As a consequence, we have

Property 2. *Given a circle $C_{\Pi_1}(q,\alpha)$ and a sphere Σ with $\Sigma \cap \Pi_1 = C_{\Pi_1}(q,\alpha)$, let h be the perpendicular from q onto the line $\Pi_1 \cap \Pi_2$. If $\Sigma \cap \Pi_2 \neq \emptyset$, then the center q' of the circle $\Sigma \cap \Pi_2$ must be on the line of Π_2 which passes through h and is perpendicular to $\Pi_1 \cap \Pi_2$, and the radius β of the circle $\Sigma \cap \Pi_2$ must satisfy $\beta^2 = d(h,q')^2 - d(h,q)^2 + \alpha^2$.*

Finally, we prove a utility lemma that will be useful in the proof of Lemma 6 and Lemma 7.

Definition 12. $\forall m \geqslant 0$, set $I_m = \{r \in \mathbb{R} \mid m/\sqrt{n} \leqslant r \leqslant (m+1)/\sqrt{n}\}$.

Lemma 8. *Let F be a convex polygon in $\mathbb{R}^3$ and Π its supporting plane. Let $S_{F,n}$ be a set of points drawn from a Poisson distribution of rate n over F. Let B be a square with center ξ and sides of length $\frac{1}{\sqrt{n}}$. Let*

$$U_{B,m} = \big\{u \in \Pi \mid u \text{ is on some circle } C_\Pi(q,\alpha) \text{ with } q \in B,\ \alpha \in I_m \text{ and } D^\circ_\Pi(q,\alpha) \cap S_{F,n} = \emptyset\big\}.$$

Then (all constants implicit in the O() *notation depend only upon F)*

(a) $\forall m \geqslant 0$, $E(|S_{F,n} \cap U_{B,m}|^2) = \mathrm{O}(m^4)$.
(b) $\forall m$: $2 \leqslant m \leqslant K\sqrt{n} + 1$, $E(|S_{F,n} \cap U_{B,m}|^2) = \mathrm{O}(m^2 \mathrm{e}^{-\sigma(m-1)^2})$.
(c) *If* $m \geqslant \sqrt{n}\,\mathrm{Diameter}(F) + 1$, *then* $|S_{F,n} \cap U_{B,m}| = 0$.
(d) $\sum_{m=0}^{\infty} E(|S_{F,n} \cap U_{B,m}|^2) = \mathrm{O}(1)$.

Proof. Since this is the first time that we do such a calculation we explicitly recall two facts about Poisson processes that we are using. The first is that if $A \subseteq \Pi$ is some region, then $|S_{F,n} \cap A|$, the number of points of $S_{F,n}$ in A, satisfies a Poisson distribution with rate n. The second fact is that there exists some universal constant c, such that if Z is *any* discrete Poisson distribution then $E(|Z|^2) \leqslant c(E(|Z|))^2$ ($c = d_2$ from Lemma 3).

To compute $E(|S_{F,n} \cap U_{B,m}|^2)$ exactly would be quite complicated because by definition, $S_{F,n}$ and $U_{B,m}$ are not independent of each other so $|S_{F,n} \cap U_{B,m}|$ is not Poisson distributed with rate n. Instead, we will bound $|S_{F,n} \cap U_{B,m}|$ from above with something whose expectation is easier to calculate.

To do this first notice that, $\forall u \in U_{B,m}$,

$$d(\xi, u) \leqslant d(\xi, q) + d(q, u) \leqslant \frac{1}{\sqrt{n}} + \frac{m+1}{\sqrt{n}} = \frac{m+2}{\sqrt{n}}. \tag{12}$$

Thus, we immediately have that $U_{B,m} \subseteq D_\Pi(\xi, (m+2)/\sqrt{n})$ so

$$|S_{F,n} \cap U_{B,m}| \leqslant \left| S_{F,n} \cap D_\Pi\left(\xi, \frac{m+2}{\sqrt{n}}\right)\right|.$$

Since $D_\Pi(\xi, (m+2)/\sqrt{n})$ *is* independent of $S_{F,n}$, we have that $|S_{F,n} \cap D_\Pi(\xi, (m+2)/\sqrt{n})|$ *is* a Poisson distributed random variable with rate n. So

$$\begin{aligned} E\left(\left|S_{F,n} \cap D_\Pi\left(\xi, \frac{m+2}{\sqrt{n}}\right)\right|\right) &= n\,\mathrm{Area}\left(D_\Pi\left(\xi, \frac{m+2}{\sqrt{n}}\right) \cap F\right) \\ &\leqslant n\pi \frac{(m+2)^2}{n} = \mathrm{O}\big(m^2\big). \end{aligned}$$

Part (a) then follows directly from the standard properties of the Poisson distribution that were reviewed at the beginning of the proof.

If $m \geqslant 2$, then we can also bound $d(\xi, u)$ from below for all $u \in U_{B,m}$:

$$d(\xi, u) \geqslant \big|d(\xi, q) - d(u, q)\big| = d(u, q) - d(\xi, q) > \frac{m}{\sqrt{n}} - \frac{1}{\sqrt{n}} = \frac{m-1}{\sqrt{n}}. \tag{13}$$

Thus $\forall m \geqslant 2$,

$$U_{B,m} \subset D_\Pi\left(\xi, \frac{m+2}{\sqrt{n}}\right) \Big\backslash D_\Pi\left(\xi, \frac{m-1}{\sqrt{n}}\right), \tag{14}$$

i.e., $U_{B,m}$ is contained in an annulus with center ξ and width $\frac{3}{\sqrt{n}}$. See Fig. 6(a). Similarly it can be shown that

$$\forall q \in B,\ \forall \alpha \in I_m,\ D_\Pi\left(\xi, \frac{m-1}{\sqrt{n}}\right) \subseteq D_\Pi^\circ(q, \alpha). \tag{15}$$

See Fig. 6(b).

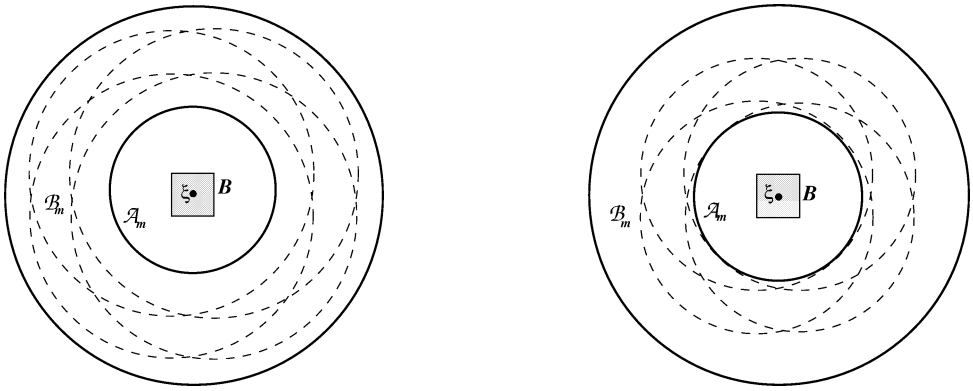

(a) Dotted circles are $C_\Pi(q,(m+1)/\sqrt{n})$ for q the four corner points of B. Note that all circles are contained in $\mathcal{B}_m$.

(b) Dotted circles are $C_\Pi(q,m/\sqrt{n})$ for q the four corner points of B. Note that all circles contain $\mathcal{A}_m$.

Fig. 6. Let $\mathcal{A}_m = D_\Pi(\xi,(m-1)/\sqrt{n})$ and $\mathcal{B}_m = D_\Pi(\xi,(m+2)/\sqrt{n}) \setminus D_\Pi(\xi,(m-1)/\sqrt{n})$. If $m \geqslant 2$, then $\forall q \in B,\ \forall \alpha \in I_m,\ \mathcal{A}_m \subseteq D^\circ_\Pi(q,\alpha)$ and $U_{B,m} \subset \mathcal{B}_m$.

We can now prove part (b) of the lemma. Let $S_{F,n}$ be given, and for notational simplicity, set

$$\mathcal{A}_m = D_\Pi\left(\xi, \frac{m-1}{\sqrt{n}}\right) \quad \text{and} \quad \mathcal{B}_m = D_\Pi\left(\xi, \frac{m+2}{\sqrt{n}}\right) \Big\backslash D_\Pi\left(\xi, \frac{m-1}{\sqrt{n}}\right).$$

If $S_{F,n} \cap \mathcal{A}_m \neq \emptyset$, then by (15),

$$\forall q \in B,\ \forall \alpha \in I_m, \quad S_{F,n} \cap D^\circ_\Pi(q,\alpha) \neq \emptyset.$$

Thus by definition, $U_{B,m} = \emptyset$, so $|S_{F,n} \cap U_{B,m}| = 0$. If $S_{F,n} \cap \mathcal{A}_m = \emptyset$, then $U_{B,m}$ might not be empty. However using (14), we know that $|S_{F,n} \cap U_{B,m}| \leqslant |S_{F,n} \cap \mathcal{B}_m|$. Therefore for $\forall m \geqslant 2$

$$|S_{F,n} \cap U_{B,m}| \leqslant \begin{cases} 0, & \text{if } S_{F,n} \cap \mathcal{A}_m \neq \emptyset, \\ |S_{F,n} \cap \mathcal{B}_m|, & \text{if } S_{F,n} \cap \mathcal{A}_m = \emptyset, \end{cases} \tag{16}$$

which yields

$$\begin{aligned} E\big(|S_{F,n} \cap U_{B,m}|^2\big) &\leqslant E\big(|S_{F,n} \cap \mathcal{B}_m|^2 \mid S_{F,n} \cap \mathcal{A}_m = \emptyset\big) \times \Pr(S_{F,n} \cap \mathcal{A}_m = \emptyset) \\ &= E\big(|S_{F,n} \cap \mathcal{B}_m|^2\big) \times \Pr(S_{F,n} \cap \mathcal{A}_m = \emptyset) && (17) \\ &\leqslant c\big(E\big(|S_{F,n} \cap \mathcal{B}_m|\big)\big)^2 \times \Pr(S_{F,n} \cap \mathcal{A}_m = \emptyset) && (18) \\ &\leqslant c\big(n\,\mathrm{Area}(\mathcal{B}_m \cap F)\big)^2 \times \mathrm{e}^{-n\,\mathrm{Area}(\mathcal{A}_m \cap F)} && (19) \\ &= \mathrm{O}\big(m^2 \mathrm{e}^{-\sigma(m-1)^2}\big) \quad \text{for } 2 \leqslant m \leqslant K\sqrt{n}+1, && (20) \end{aligned}$$

where c is a universal constant and σ, K are some constants of Lemma 4.

Equality (17) follows from the fact that $\mathcal{A}_m$ and $\mathcal{B}_m$ are disjoint so $S_{F,n} \cap \mathcal{A}_m$ and $S_{F,n} \cap \mathcal{B}_m$ are independent. (18) comes from the previously noted fact that there is a universal constant c such that if Z is any Poisson random variable then $E(Z^2) \leqslant c(E(Z))^2$, (19) from the definition of Poisson random variables, (20) from the fact that $\mathrm{Area}(\mathcal{B}_m \cap F) = \mathrm{O}(m/n)$ and Lemma 4; the reason for restricting

$m \leqslant K\sqrt{n}+1$ is to guarantee that $\frac{m-1}{\sqrt{n}} \leqslant K$ so that Lemma 4 can be applied to bound $\mathrm{Area}(\mathcal{A}_m \cap F)$ from below by $\sigma((m-1)/\sqrt{n})^2$. We have thus proven part (b).

To prove part (c), let $L = \mathrm{Diameter}(F)$. For $m \geqslant \sqrt{n}\,L+1$, we have $F \subseteq \mathcal{A}_m$ so $S_{F,n} \cap \mathcal{A}_m = S_{F,n}$. Eq. (16) and the definition of $\mathcal{B}_m$ then give $|S_{F,n} \cap U_{B,m}| = 0$.

Combining (a) and (b) proves that

$$\sum_{m=0}^{\lfloor K\sqrt{n}+1\rfloor} E(|S_{F,n} \cap U_{B,m}|^2) = \mathrm{O}(1).$$

Part (c) gives

$$\sum_{m \geqslant \lceil \sqrt{n}L+1\rceil} E(|S_{F,n} \cap U_{B,m}|^2) = \sum_{m \geqslant \lceil \sqrt{n}L+1\rceil} 0 = 0.$$

Thus, to prove part (d) it only remains to show that

$$\sum_{m=\lceil K\sqrt{n}+1\rceil}^{\lfloor \sqrt{n}L+1\rfloor} E\big(|S_{F,n} \cap U_{B,m}|^2\big) = \mathrm{O}(1).$$

Returning to (19) we see that $\forall m \geqslant \lceil K\sqrt{n}+1\rceil$

$$E\big(|S_{F,n} \cap U_{B,m}|^2\big) \leqslant c\big(n\,\mathrm{Area}(\mathcal{B}_m \cap F)\big)^2 \cdot \mathrm{e}^{-n\,\mathrm{Area}(\mathcal{A}_m \cap F)} = \mathrm{O}\big(n^2 \cdot \mathrm{e}^{-n\,\mathrm{Area}(D_\Pi(\xi,K)\cap F)}\big)$$

since $\forall m$, $\mathrm{Area}(\mathcal{B}_m \cap F) \leqslant \mathrm{Area}(F)$ and

$$\forall m \geqslant \lceil K\sqrt{n}+1\rceil, \quad \mathrm{Area}(\mathcal{A}_m \cap F) \geqslant \mathrm{Area}\big(D_\Pi(\xi,K) \cap F\big).$$

Lemma 4 tells us that $\mathrm{Area}(D_\Pi(\xi,K) \cap F) \geqslant \sigma K^2$, so

$$\sum_{m=\lceil K\sqrt{n}+1\rceil}^{\lfloor \sqrt{n}L+1\rfloor} E\big(|S_{F,n} \cap U_{B,m}|^2\big) = \mathrm{O}\big((\sqrt{n}\,L+1) \cdot n^2 \cdot \mathrm{e}^{-\sigma n K^2}\big) = \mathrm{O}(1),$$

and we are done. □

4.2. Proofs of Lemmas 6 and 7

We now have the tools to prove Lemma 6.

Proof of Lemma 6. In this lemma we assume that we are using a coordinate system of Π_1 and its associated orthogonal projection onto Π_2 such that that every point of F_1 and F_2 have positive x- and y-coordinates in this system. See Fig. 7.

Now let $k = 1, 2$. We partition plane Π_k into axis parallel squares

$$B^k_{s,i} = \left\{(x,y) \in \Pi_k \;\middle|\; \frac{s}{\sqrt{n}} \leqslant x \leqslant \frac{s+1}{\sqrt{n}},\ \frac{i}{\sqrt{n}} \leqslant y \leqslant \frac{i+1}{\sqrt{n}}\right\}.$$

Let L be such that for $k = 1, 2$, $F_k \subset \{(x,y) \in \Pi_k \mid 0 \leqslant x \leqslant L,\ 0 \leqslant y \leqslant L\}$. L is a constant that is a function of F_1 and F_2. By the definition of L,

$$\text{for } k = 1, 2, \quad F_k \subseteq \bigcup_{s,i=0}^{\lfloor L\sqrt{n}\rfloor} B^k_{s,i}.$$

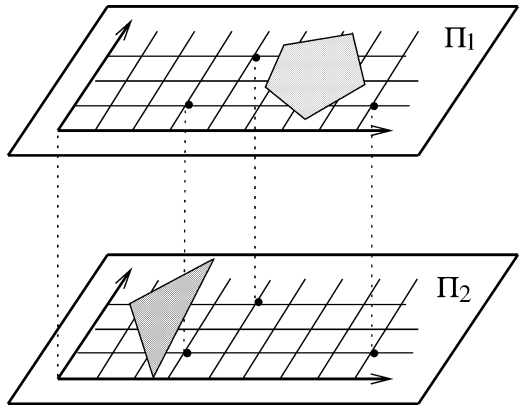

Fig. 7. Coordinate system of Π_1 and Π_2 when $\Pi_1 \parallel \Pi_2$.

Let $Y_{B^1_{s,i},B^2_{t,j}}$ be the set of Voronoi spheres $S(p,r) \in X_{F_1,F_2,n}$ such that

$$\mathrm{NN}(p,\Pi_1) \in B^1_{s,i} \quad \text{and} \quad \mathrm{NN}(p,\Pi_2) \in B^2_{t,j}.$$

Recall that by definition, for any sphere $S(p,r) \in X_{F_1,F_2,n}$, $\mathrm{NN}(p,\Pi_1) \in F_1$ and $\mathrm{NN}(p,\Pi_2) \in F_2$. This means that

$$X_{F_1,F_2,n} = \bigcup_{s,i=0}^{\lfloor L\sqrt{n}\rfloor} \bigcup_{t,j=0}^{\lfloor L\sqrt{n}\rfloor} Y_{B^1_{s,i},B^2_{t,j}}.$$

However, from the construction of $B^1_{s,i}$ and $B^2_{t,j}$ and the fact that $\Pi_1 \parallel \Pi_2$, we have that if $\mathrm{NN}(p,\Pi_1) \in B^1_{s,i}$ then $\mathrm{NN}(p,\Pi_2) \in B^2_{s,i}$ and vice-versa. Thus,

$$X_{F_1,F_2,n} = \bigcup_{s,i=0}^{\lfloor L\sqrt{n}\rfloor} Y_{B^1_{s,i},B^2_{s,i}}$$

and

$$E\big(|X_{F_1,F_2,n}|\big) \leqslant \sum_{s=0}^{\lfloor L\sqrt{n}\rfloor} \sum_{i=0}^{\lfloor L\sqrt{n}\rfloor} E\big(|Y_{B^1_{s,i},B^2_{s,i}}|\big). \tag{21}$$

For $s,i \in \{0,1,\ldots,\lfloor L\sqrt{n}\rfloor\}$, $m \geqslant 0$, let

$$U^k_{s,i,m} = \big\{u \in \Pi_k \mid u \text{ is on some circle } C_{\Pi_k}(q,\alpha) \text{ with } q \in B^k_{s,i},\ \alpha \in I_m \text{ and } D^\circ_{\Pi_k}(q,\alpha) \cap S_{F_1,F_2,n} = \emptyset\big\}.$$

Let $S = S(p,r)$ be a Voronoi sphere in $Y_{B^1_{s,i},B^2_{s,i}}$. Then by the definition of $Y_{B^1_{s,i},B^2_{s,i}}$, $S \cap \Pi_1 = D_{\Pi_1}(q,\alpha)$ for $q = \mathrm{NN}(p,\Pi_1) \in B^1_{s,i}$ and $\alpha \geqslant 0$. Furthermore, $D^\circ_{\Pi_1}(q,\alpha) \cap S_{F_1,F_2,n} = \emptyset$ and one defining point of S is on $C_{\Pi_1}(q,\alpha)$. Letting m be such that $\alpha \in I_m$, we see that $S_{F_1,F_2,n} \cap (S \cap \Pi_1) = S_{F_1,F_2,n} \cap C_{\Pi_1}(q,\alpha) \subseteq S_{F_1,F_2,n} \cap U^1_{s,i,m}$. Similarly there exists m' such that $S_{F_1,F_2,n} \cap (S \cap \Pi_2) \subseteq S_{F_1,F_2,n} \cap U^2_{s,i,m'}$. This means that $\forall w \in S_{F_1,F_2,n} \cap S$,

$$\begin{cases} \text{if } w \in \Pi_1, \text{ then } w \in S_{F_1,F_2,n} \cap U^1_{s,i,m} \quad \text{and} \\ \text{if } w \in \Pi_2, \text{ then } w \in S_{F_1,F_2,n} \cap U^2_{s,i,m'}. \end{cases}$$

Recall that a Voronoi sphere for $S_{F_1,F_2,n}$ is determined by two defining points and by the discussion above, these two defining points must be in $U^1_{s,i,m} \cup U^2_{s,i,m'}$ for some m, m'. Hence the number of these spheres, i.e. $|Y_{B^1_{s,i},B^2_{s,i}}|$, is bounded by the number of all possible 4-tuples of points of $S_{F_1,F_2,n}$ such that for arbitrary m, m', 2 points are from $S_{F_1,F_2,n} \cap U^1_{s,i,m}$ and 2 points are from $S_{F_1,F_2,n} \cap U^2_{s,i,m'}$. This leads automatically to

$$|Y_{B^1_{s,i},B^2_{s,i}}| \leqslant \sum_{m,m'=0}^{\infty} \left(\begin{array}{l} \text{No. of 4 tuples } (w^1_1, w^1_2, w^2_1, w^2_2) \\ \text{such that} \left(\begin{array}{l} w^1_1, w^1_2 \in S_{F_1,F_2,n} \cap U^1_{s,i,m} \\ w^2_1, w^2_2 \in S_{F_1,F_2,n} \cap U^2_{s,i,m'} \end{array} \right) \end{array} \right). \tag{22}$$

For *fixed* m, m', the number of such 4 tuples is equal to

$$\left|S_{F_1,F_2,n} \cap U^1_{s,i,m}\right|^2 \times \left|S_{F_1,F_2,n} \cap U^2_{s,i,m'}\right|^2.$$

Also, since $S_{F_1,F_2,n}$ is distributed by a Poisson process, the distribution of $|S_{F_1,F_2,n} \cap F_1|$ is independent of that of $|S_{F_1,F_2,n} \cap F_2|$. Hence taking expectations over (22) yields

$$\begin{aligned} E\left(|Y_{B^1_{s,i},B^2_{s,i}}|\right) &\leqslant \sum_{m,m'=0}^{\infty} E\left(\left|S_{F_1,F_2,n} \cap U^1_{s,i,m}\right|^2 \times \left|S_{F_1,F_2,n} \cap U^2_{s,i,m'}\right|^2\right) \\ &\leqslant \sum_{m,m'=0}^{\infty} E\left(\left|S_{F_1,F_2,n} \cap U^1_{s,i,m}\right|^2\right) \times E\left(\left|S_{F_1,F_2,n} \cap U^2_{s,i,m'}\right|^2\right) \\ &\leqslant \left[\sum_{m=0}^{\infty} E\left(\left|S_{F_1,F_2,n} \cap U^1_{s,i,m}\right|^2\right)\right] \times \left[\sum_{m'=0}^{\infty} E\left(\left|S_{F_1,F_2,n} \cap U^2_{s,i,m'}\right|^2\right)\right]. \end{aligned} \tag{23}$$

By Lemma 8, we have $\sum_{m=0}^{\infty} E(|S_{F_1,F_2,n} \cap U^1_{s,i,m}|^2)$ and $\sum_{m'=0}^{\infty} E(|S_{F_1,F_2,n} \cap U^2_{s,i,m'}|^2)$ are both O(1), automatically yielding

$$E\left(|Y_{B^1_{s,i},B^2_{s,j}}|\right) = \mathrm{O}(1). \tag{24}$$

Plugging this into (21) we get

$$E\left(|X_{F_1,F_2,n}|\right) = \mathrm{O}(n), \tag{25}$$

and are done. □

We now prove Lemma 7.

Proof of Lemma 7. We assume that we are given coordinate systems for Π_k, $k = 1, 2$, that satisfy the following conditions (see Fig. 8(a)):

(i) the x-axis of Π_k is $\Pi_1 \cap \Pi_2$. It is oriented so that F_1 lies on the right-hand side of the positive direction of $\Pi_1 \cap \Pi_2$. The origin is chosen so that every point of $F_1 \cup F_2$ has positive x-coordinate. (ii) Among the two half planes of Π_k separated by $\Pi_1 \cap \Pi_2$, the one containing F_k corresponds to positive y-coordinate. Such a pair of coordinate systems can be chosen because $\Pi_1 \nparallel \Pi_2$ and the facts that F_1 is totally contained in one of the closed halfspaces bounded by Π_2 and F_2 is totally contained in one of the closed halfspaces bounded by Π_1.

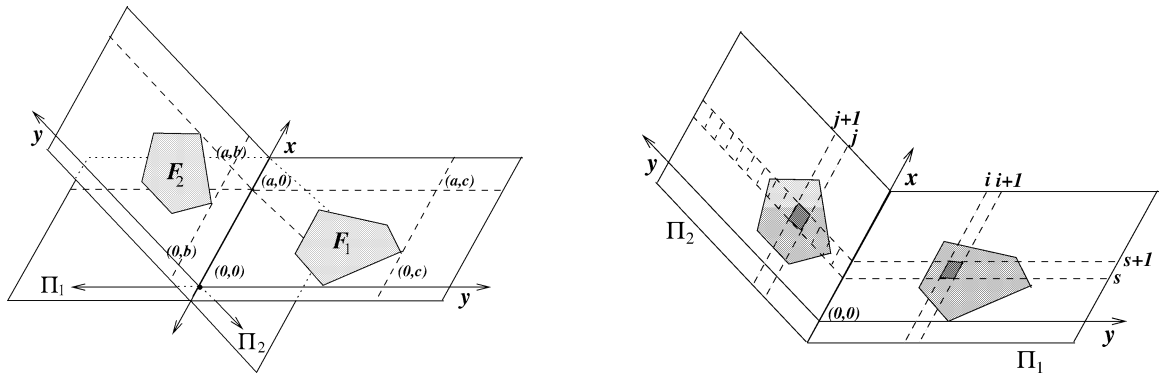

(a) Coordinate system of Π_1 and Π_2 (b) The boxes $B^1_{s,i} \subset \Pi_1$ and $B^2_{s,j} \subset \Pi_2$

Fig. 8. The case that $\Pi_1 \nparallel \Pi_2$.

We partition Π_k into axis parallel squares

$$B^k_{s,i} = \left\{ (x, y) \in \Pi_k \;\middle|\; \frac{s}{\sqrt{n}} \leqslant x \leqslant \frac{s+1}{\sqrt{n}},\ \frac{i}{\sqrt{n}} \leqslant y \leqslant \frac{i+1}{\sqrt{n}} \right\}.$$

See Fig. 8(b). Set $\xi^k_{s,i}$ to be the center of

$$B^k_{s,i}\colon\ \xi^k_{s,i} = \left\{ \left(\frac{2s+1}{2\sqrt{n}}, \frac{2i+1}{2\sqrt{n}} \right) \in \Pi_k \right\}.$$

Let L be a constant large enough so that $L \geqslant \max(\text{Diameter}(F_1), \text{Diameter}(F_2))$ and for $k = 1, 2$, $F_k \subset \{(x, y) \in \Pi_k \mid 0 \leqslant x \leqslant L,\ 0 \leqslant y \leqslant L\}$. In particular, this last implies that

$$\text{for } k = 1, 2, \quad F_k \subseteq \bigcup_{s,i=0}^{\lfloor L\sqrt{n} \rfloor} B^k_{s,i}.$$

Note that for any $S(p, r) \in X_{F_1,F_2,n}$, $\text{NN}(p, \Pi_1) \in F_1$ and $\text{NN}(p, \Pi_2) \in F_2$. As in the proof of Lemma 6, we analyze $X_{F_1,F_2,n}$ by partitioning it into smaller sets indexed by the squares in which the $\text{NN}(p, \Pi_k)$ are located. Let $Y_{B^1_{s,i}, B^2_{t,j}}$ be the set of Voronoi spheres $S(p, r) \in X_{F_1,F_2,n}$ such that

$$\text{NN}(p, \Pi_1) \in B^1_{s,i} \quad \text{and} \quad \text{NN}(p, \Pi_2) \in B^2_{t,j}.$$

In the proof of Lemma 6, where $\Pi_1 \parallel \Pi_2$, we strongly used the fact that $Y_{B^1_{s,i}, B^2_{t,j}} = \emptyset$ unless $s = t$ and $i = j$. Now that $\Pi_1 \nparallel \Pi_2$, this is no longer true. Instead we use something weaker. Let $p_1 = \text{NN}(p, \Pi_1)$ and $p_2 = \text{NN}(p, \Pi_2)$. Express $p_1 = (x_1, y_1)$, $p_2 = (x_2, y_2)$ using the respective coordinate systems for Π_1 and Π_2 that were described above. In this notation, Property 2 states that $x_1 = x_2$. Thus, by the definition of the $B^k_{s,i}$, we have that $\forall i, j$, if $s \neq t$ then $Y_{B^1_{s,i}, B^2_{t,j}} = \emptyset$. This means that

$$E\big(|X_{F_1,F_2,n}|\big) \leqslant \sum_{s=0}^{\lfloor L\sqrt{n} \rfloor} \sum_{i=0}^{\lfloor L\sqrt{n} \rfloor} \sum_{j=0}^{\lfloor L\sqrt{n} \rfloor} E\big(|Y_{B^1_{s,i}, B^2_{s,j}}|\big). \tag{26}$$

Hence we can compute $E(|X_{F_1,F_2,n}|)$ if we can calculate $E(|Y_{B^1_{s,i},B^2_{s,j}}|)$ for arbitrary s, i and j. We start by showing that $\forall s, i, j$, $E(|Y_{B^1_{s,i},B^2_{s,j}}|) = \mathrm{O}(1)$ (this will be needed later) and then proceed to a more delicate analysis based on taking the relationship between the s, i and j values into account.

For $s, i \in \{0, 1, \ldots, \lfloor L\sqrt{n}\rfloor\}$, $m \geqslant 0$, let

$$U^k_{s,i,m} = \Big\{u \in \Pi_k \mid u \text{ is on some circle } C_{\Pi_k}(q,\alpha) \text{ with } q \in B^k_{s,i},\ \alpha \in I_m \text{ and } D^\circ_{\Pi_k}(q,\alpha) \cap S_{F_1,F_2,n} = \emptyset\Big\}.$$

Let S be a Voronoi sphere in $Y_{B^1_{s,i},B^2_{s,j}}$. As in the proof of Lemma 6, we have that there exist m, m' such that the two defining points of S must belong to $U^1_{s,i,m} \cup U^2_{s,j,m'}$. Again as in Lemma 6, $|Y_{B^1_{s,i},B^2_{s,j}}|$ is bounded by the number of all possible 4-tuples of points of $S_{F_1,F_2,n}$ such that for arbitrary m, m', 2 points are from $S_{F_1,F_2,n} \cap U^1_{s,i,m}$ and 2 points are from $S_{F_1,F_2,n} \cap U^2_{s,j,m'}$.

Thus

$$|Y_{B^1_{s,i},B^2_{s,j}}| \leqslant \sum_{m,m'=0}^{\infty} \left(\begin{array}{l} \text{No. of 4 tuples } (w^1_1, w^1_2, w^2_1, w^2_2) \\ \text{such that} \left(\begin{array}{l} w^1_1, w^1_2 \in S_{F_1,F_2,n} \cap U^1_{s,i,m} \\ w^2_1, w^2_2 \in S_{F_1,F_2,n} \cap U^2_{s,j,m'} \end{array} \right) \end{array} \right). \tag{27}$$

For *fixed* m, m', the number of such 4 tuples is equal to

$$\left|S_{F_1,F_2,n} \cap U^1_{s,i,m}\right|^2 \times \left|S_{F_1,F_2,n} \cap U^2_{s,j,m'}\right|^2.$$

Following Eq. (23) we have

$$\begin{aligned} E\big(|Y_{B^1_{s,i},B^2_{s,j}}|\big) &\leqslant \sum_{m,m'=0}^{\infty} E\big(\left|S_{F_1,F_2,n} \cap U^1_{s,i,m}\right|^2 \times \left|S_{F_1,F_2,n} \cap U^2_{s,j,m'}\right|^2\big) \\ &\leqslant \sum_{m,m'=0}^{\infty} E\big(\left|S_{F_1,F_2,n} \cap U^1_{s,i,m}\right|^2\big) \times E\big(\left|S_{F_1,F_2,n} \cap U^2_{s,j,m'}\right|^2\big) \\ &\leqslant \left[\sum_{m=0}^{\infty} E\big(\left|S_{F_1,F_2,n} \cap U^1_{s,i,m}\right|^2\big)\right] \times \left[\sum_{m'=0}^{\infty} E\big(\left|S_{F_1,F_2,n} \cap U^2_{s,j,m'}\right|^2\big)\right]. \end{aligned} \tag{28}$$

Applying Lemma 8 to both factors of the right-hand side then proves that

$$\forall s, i, j, \quad E\big(|Y_{B^1_{s,i},B^2_{s,j}}|\big) = \mathrm{O}(1). \tag{29}$$

Plugging this into (26) yields that $E(|X_{F_1,F_2,n}|) = \mathrm{O}(n^{\frac{3}{2}})$. To prove that $E(|X_{F_1,F_2,n}|) = \mathrm{O}(n)$, requires a more delicate analysis. In (28) we fixed s, i, j and then summed over *all* possible values of m, m'. We now take advantage of the fact that Property 2 will enable us to restrict the range of m' that we have to sum over for fixed s, i, j, m.

Let

$$V^2_{s,i,j,m} = \left\{ u \in \Pi_2 \;\middle|\; \begin{array}{l} u \text{ is on some circle } C_{\Pi_2}(q',\beta) \text{ s.t. } D^\circ_{\Pi_2}(q',\beta) \cap S_{F_1,F_2,n} = \emptyset \\ \quad \text{where } q', \beta \text{ satisfy that} \\ \quad \text{(i) } q' \in B^2_{s,j} \\ \quad \text{(ii) there exists a sphere } S = S(p,r) \text{ with} \\ \qquad S \cap \Pi_1 = D_{\Pi_1}(q,\alpha) \text{ and } S \cap \Pi_2 = D_{\Pi_2}(q',\beta) \\ \qquad \text{for some } q \in B^1_{s,i},\ \alpha \in I_m \end{array} \right\}.$$

Then, using the same type of argument as before,

$$|Y_{B^1_{s,i},B^2_{s,j}}| \leqslant \sum_{m=0}^{\infty} \left(\begin{array}{l} \text{No. of 4 tuples } (w^1_1, w^1_2, w^2_1, w^2_2) \\ \text{such that} \left(\begin{array}{l} w^1_1, w^1_2 \in S_{F_1,F_2,n} \cap U^1_{s,i,m} \\ w^2_1, w^2_2 \in S_{F_1,F_2,n} \cap V^2_{s,i,j,m} \end{array} \right) \end{array} \right). \tag{30}$$

Note that we now sum over only one index m rather than two indices m, m'. This is at the expense of pushing the restricted range of m' into the definition of $V^2_{s,i,j,m}$.

$V^2_{s,i,j,m}$ only depends on the values s, i, j, m and the point set $S_{F_1,F_2,n} \cap \Pi_2$. It is therefore *independent* of $S_{F_1,F_2,n} \cap U^1_{s,i,m}$. Thus,

$$\begin{aligned} E\big(|Y_{B^1_{s,i},B^2_{s,j}}|\big) &\leqslant \sum_{m=0}^{\infty} E\big(\big|S_{F_1,F_2,n} \cap U^1_{s,i,m}\big|^2 \times \big|S_{F_1,F_2,n} \cap V^2_{s,i,j,m}\big|^2\big) \\ &\leqslant \sum_{m=0}^{\infty} E\big(\big|S_{F_1,F_2,n} \cap U^1_{s,i,m}\big|^2\big) \times E\big(\big|S_{F_1,F_2,n} \cap V^2_{s,i,j,m}\big|^2\big). \end{aligned} \tag{31}$$

By definition $S_{F_1,F_2,n} \cap \Pi_1$ has the same distribution as $S_{F_1,n}$. Thus we can apply Lemma 8. Since $L > \text{Diameter}(F_1)$, part (c) of Lemma 8 says that for $m > \sqrt{n}\,L + 1$, $E(|S_{F_1,F_2,n} \cap U^1_{s,i,m}|^2) = 0$. Part (a) of the lemma says that $\forall m$, $E(|S_{F_1,F_2,n} \cap U^1_{s,i,m}|^2) = \mathrm{O}(m^4)$. Thus,

$$E\big(|Y_{B^1_{s,i},B^2_{s,j}}|\big) = \mathrm{O}\left(\sum_{m=0}^{\lfloor \sqrt{n}(L+1) \rfloor} m^4 E\big(\big|S_{F_1,F_2,n} \cap V^2_{s,i,j,m}\big|^2\big) \right). \tag{32}$$

It remains to calculate $E(|S_{F_1,F_2,n} \cap V^2_{s,i,j,m}|^2)$.

Let l be the line of intersection $l = \Pi_1 \cap \Pi_2$ and note that, by Property 2,

$$\beta^2 = d(q', l)^2 + \alpha^2 - d(q, l)^2.$$

Since $\frac{j}{\sqrt{n}} \leqslant d(q', l) \leqslant \frac{j+1}{\sqrt{n}}$, $\frac{i}{\sqrt{n}} \leqslant d(q, l) \leqslant \frac{i+1}{\sqrt{n}}$ and $\frac{m}{\sqrt{n}} \leqslant \alpha \leqslant \frac{m+1}{\sqrt{n}}$, it follows that

$$\sqrt{\frac{j^2 + m^2 - (i+1)^2}{n}} \leqslant \beta \leqslant \sqrt{\frac{(j+1)^2 + (m+1)^2 - i^2}{n}}. \tag{33}$$

For $\forall u \in V^2_{s,i,j,m}$,

$$\begin{aligned} d\big(\xi^2_{s,j}, u\big) &\leqslant d\big(\xi^2_{s,j}, q'\big) + d(q', u) \\ &\leqslant \frac{1}{\sqrt{n}} + \sqrt{\frac{(j+1)^2 + (m+1)^2 - i^2}{n}} = \frac{\sqrt{(j+1)^2 + (m+1)^2 - i^2} + 1}{\sqrt{n}} \quad \text{by (33)}, \end{aligned}$$

and if $j \geqslant i + 3$, then

$$\begin{aligned} d\big(\xi^2_{s,j}, u\big) &\geqslant \big|d\big(\xi^2_{s,j}, q'\big) - d(u, q')\big| = d(u, q') - d\big(\xi^2_{s,j}, q'\big) \quad \text{by } j \geqslant i+3, \\ &> \frac{\sqrt{j^2 + m^2 - (i+1)^2}}{\sqrt{n}} - \frac{1}{\sqrt{n}} = \frac{\sqrt{j^2 + m^2 - (i+1)^2} - 1}{\sqrt{n}} \quad \text{by (33)}. \end{aligned}$$

Hence $\forall j \geqslant i + 3$,

$$V^2_{s,i,j,m} \subseteq D_{\Pi_2}\left(\xi^2_{s,j}, \frac{\sqrt{(j+1)^2+(m+1)^2-i^2}+1}{\sqrt{n}}\right) \Big\backslash D_{\Pi_2}\left(\xi^2_{s,j}, \frac{\sqrt{j^2+m^2-(i+1)^2}-1}{\sqrt{n}}\right), \tag{34}$$

i.e., $V^2_{s,i,j,m}$ is contained in the given annulus. Also note that

$$D_{\Pi_2}\left(\xi^2_{s,j}, \frac{\sqrt{j^2+m^2-(i+1)^2}-1}{\sqrt{n}}\right) \subseteq D^\circ_{\Pi_2}(q', \beta), \quad \forall q' \in B^2_{s,j},\ \forall \beta \text{ satisfying (33)}. \tag{35}$$

Let

$$\mathcal{A}'_m = D_{\Pi_2}\left(\xi^2_{s,j}, \frac{\sqrt{j^2+m^2-(i+1)^2}-1}{\sqrt{n}}\right)$$

and

$$\mathcal{B}'_m = D_{\Pi_2}\left(\xi^2_{s,j}, \frac{\sqrt{(j+1)^2+(m+1)^2-i^2}+1}{\sqrt{n}}\right) \Big\backslash D_{\Pi_2}\left(\xi^2_{s,j}, \frac{\sqrt{j^2+m^2-(i+1)^2}-1}{\sqrt{n}}\right).$$

Using (34) and (35), we can write analogs of (17), (18) and (19).

$$\begin{aligned} E\left(\left|S_{F_1,F_2,n} \cap V^2_{s,i,j,m}\right|^2\right) &\leqslant E\left(|S_{F_1,F_2,n} \cap \mathcal{B}'_m|^2\right) \times \Pr(S_{F_1,F_2,n} \cap \mathcal{A}'_m = \emptyset) \\ &\leqslant c\left(E\left(|S_{F_1,F_2,n} \cap \mathcal{B}'_m|\right)\right)^2 \times \Pr(S_{F_1,F_2,n} \cap \mathcal{A}'_m = \emptyset) \\ &= c\left(n \operatorname{Area}(\mathcal{B}'_m \cap F_2)\right)^2 \times \mathrm{e}^{-n \operatorname{Area}(\mathcal{A}'_m \cap F_2)}. \end{aligned} \tag{36}$$

To evaluate the right-hand side of the bottom term, we will first need to calculate $n \operatorname{Area}(\mathcal{B}'_m \cap F_2)$. Noting that

$$\forall a, b, c > 0, \quad \sqrt{a^2+b^2-c^2} \leqslant \sqrt{a^2+b^2+c^2} \leqslant (a+b+c),$$

we see that

$$\begin{aligned} \operatorname{Area}(\mathcal{B}'_m \cap F_2) &= \frac{\pi}{n}\left(\left(\sqrt{(j+1)^2+(m+1)^2-i^2}+1\right)^2 - \left(\sqrt{j^2+m^2-(i+1)^2}-1\right)^2\right) \\ &= \frac{\pi}{n}\left(2i+2j+2m+3+2\sqrt{(j+1)^2+(m+1)^2-i^2}+2\sqrt{j^2+m^2-(i+1)^2}\right) \\ &\leqslant \frac{\pi}{n}\left(2i+2j+2m+3+2(j+1+m+1+i)+2(j+m+i+1)\right) \\ &\leqslant \frac{\pi}{n}6(i+j+m+2). \end{aligned}$$

Thus we have

$$n \operatorname{Area}(\mathcal{B}'_m \cap F_2) \leqslant n\frac{6\pi(i+j+m+2)}{n} = \mathrm{O}(i+j+m+2). \tag{37}$$

Next note that from Lemma 4, there exist σ, K dependent only upon F_2 such that if

$$\left(\sqrt{j^2+m^2-(i+1)^2}-1\right)/\sqrt{n} \leqslant K,$$

then

$$n \operatorname{Area}(\mathcal{A}'_m \cap F_2) \geqslant n\sigma\left(\frac{\sqrt{j^2+m^2-(i+1)^2}-1}{\sqrt{n}}\right)^2,$$

while if $(\sqrt{j^2+m^2-(i+1)^2}-1)/\sqrt{n} \geqslant K$, then

$$n\,\mathrm{Area}(\mathcal{A}'_m \cap F_2) \geqslant \sigma K^2 n.$$

If we restrict ourselves to $j \geqslant i+3$ and take a slightly smaller σ, then we have that

$$\mathrm{e}^{-n\,\mathrm{Area}(\mathcal{A}'_m \cap F_2)} = \begin{cases} \mathrm{O}(\mathrm{e}^{-\sigma(j^2+m^2-i^2)}), & \text{if } \frac{\sqrt{j^2+m^2-(i+1)^2}-1}{\sqrt{n}} \leqslant K, \\ \mathrm{O}(\mathrm{e}^{-\sigma K^2 n}), & \text{if } \frac{\sqrt{j^2+m^2-(i+1)^2}-1}{\sqrt{n}} \geqslant K. \end{cases} \tag{38}$$

Assuming $j \geqslant i+3$ we can use Lemma 8, (36), (37) and (38) to evaluate (32). Set

$$T = \min\left(\left\lfloor \sqrt{(K\sqrt{n}+1)^2+(i+1)^2-j^2} \right\rfloor, \lfloor \sqrt{n}L+1 \rfloor\right).$$

Then

$$\begin{aligned} E\left(|Y_{B^1_{s,i},B^2_{s,j}}|\right) &= \mathrm{O}\left(\sum_{m=0}^{T} m^4(i+j+m+2)^2 \mathrm{e}^{-\sigma(j^2+m^2-i^2)}\right) \\ &\quad + \mathrm{O}\left(\sum_{m=T+1}^{\sqrt{n}L+1} m^4(i+j+m+2)^2 \mathrm{e}^{-\sigma K^2 n}\right). \end{aligned}$$

Noting that $\forall i,j,m$, $(i+j+m+2) \leqslant (i+j)(m+2)$, $\sum_{m=0}^{\infty} m^4(m+2)^2\mathrm{e}^{-\sigma m^2} = \mathrm{O}(1)$, and $\sum_{m=0}^{\sqrt{n}L+1} m^4(m+2)^2\mathrm{e}^{-\sigma K^2 n/2} = \mathrm{O}(1)$, we find that for $j \geqslant i+3$,

$$E\left(|Y_{B^1_{s,i},B^2_{s,j}}|\right) = \mathrm{O}\left((i+j)^2\mathrm{e}^{-\sigma(j^2-i^2)}\right) + \mathrm{O}\left((i+j)^2\mathrm{e}^{-\sigma K^2 n/2}\right). \tag{39}$$

Now we will prove that

$$\forall s,\ \sum_{i=0}^{\lfloor L\sqrt{n}\rfloor} \sum_{j=0}^{\lfloor L\sqrt{n}\rfloor} E\left(|Y_{B^1_{s,i},B^2_{s,j}}|\right) = \mathrm{O}\left(\sqrt{n}\right):$$

From (29) and (39), we have

$$\begin{aligned} \sum_{i=0}^{\lfloor L\sqrt{n}\rfloor} \sum_{j\geqslant i}^{\lfloor L\sqrt{n}\rfloor} E\left(|Y_{B^1_{s,i},B^2_{s,j}}|\right) &= \sum_{i=0}^{\lfloor L\sqrt{n}\rfloor} \sum_{j=i}^{i+2} E\left(|Y_{B^1_{s,i},B^2_{s,j}}|\right) + \sum_{i=0}^{\lfloor L\sqrt{n}\rfloor} \sum_{j\geqslant i+3}^{\lfloor L\sqrt{n}\rfloor} E\left(|Y_{B^1_{s,i},B^2_{s,j}}|\right) \\ &= \mathrm{O}\left(\sqrt{n}\right) + \mathrm{O}\left(\sum_{i=0}^{\lfloor L\sqrt{n}\rfloor} \sum_{j\geqslant i+3}^{\lfloor L\sqrt{n}\rfloor} (i+j)^2\mathrm{e}^{-\sigma(j^2-i^2)}\right) + \mathrm{O}(1) \\ &= \mathrm{O}\left(\sqrt{n}\right). \end{aligned} \tag{40}$$

The last equality comes from the fact that

$$\sum_{i=0}^{\infty} \sum_{j\geqslant i+3}^{\infty} (i+j)^2\mathrm{e}^{-\sigma(j^2-i^2)} = \mathrm{O}(1).$$

Now note that in the proof so far we have arbitrarily chosen which face is F_1 and which face is F_2. If we swap F_1 and F_2 in the proof and also swap i and j we would derive

$$\sum_{j=0}^{\lfloor L\sqrt{n}\rfloor}\sum_{i\geqslant j}^{\lfloor L\sqrt{n}\rfloor} E\left(|Y_{B^2_{s,j},B^1_{s,i}}|\right)=\mathrm{O}\left(\sqrt{n}\right). \tag{41}$$

But $Y_{B^1_{s,i},B^2_{s,j}}=Y_{B^2_{s,j},B^1_{s,i}}$, so this just says

$$\sum_{i=0}^{\lfloor L\sqrt{n}\rfloor}\sum_{j\leqslant i}^{\lfloor L\sqrt{n}\rfloor} E\left(|Y_{B^1_{s,i},B^2_{s,j}}|\right)=\mathrm{O}\left(\sqrt{n}\right).$$

Thus

$$\begin{aligned}\sum_{i=0}^{\lfloor L\sqrt{n}\rfloor}\sum_{j=0}^{\lfloor L\sqrt{n}\rfloor} E\left(|Y_{B^1_{s,i},B^2_{s,j}}|\right) &\leqslant \sum_{i=0}^{\lfloor L\sqrt{n}\rfloor}\sum_{j\geqslant i}^{\lfloor L\sqrt{n}\rfloor} E\left(|Y_{B^1_{s,i},B^2_{s,j}}|\right)+\sum_{i=0}^{\lfloor L\sqrt{n}\rfloor}\sum_{j\leqslant i}^{\lfloor L\sqrt{n}\rfloor} E\left(|Y_{B^1_{s,i},B^2_{s,j}}|\right)\\ &=\mathrm{O}\left(\sqrt{n}\right)+\mathrm{O}\left(\sqrt{n}\right)=\mathrm{O}\left(\sqrt{n}\right).\end{aligned}$$

Therefore (26) can be rewritten as

$$E\left(|X_{F_1,F_2,n}|\right)\leqslant\sum_{s=0}^{\lfloor L\sqrt{n}\rfloor}\sum_{i=0}^{\lfloor L\sqrt{n}\rfloor}\sum_{j=0}^{\lfloor L\sqrt{n}\rfloor} E\left(|Y_{B^1_{s,i},B^2_{s,j}}|\right)=\sum_{s=0}^{\lfloor L\sqrt{n}\rfloor}\mathrm{O}\left(\sqrt{n}\right)=\mathrm{O}(n), \tag{42}$$

and we are done. □

5. Bounding the number of $\frac{\log n}{\sqrt{n}}$-good Type-III spheres

In this section we prove (6), i.e.,

$$E\left(\text{No. of } \tfrac{\log n}{\sqrt{n}}\text{-good Type-III spheres}\right)=\mathrm{o}(n).$$

We do this by splitting it into two cases. In Section 5.1 we show that the expected number of $\frac{\log n}{\sqrt{n}}$-good Type-III spheres *whose centers are outside or on* $\mathcal{P}$ is $\mathrm{o}(n)$. In Section 5.2 we show that the expected number of $\frac{\log n}{\sqrt{n}}$-good Type-III spheres *whose centers are inside* $\mathcal{P}$ is $\mathrm{o}(n)$. Combining these two results will prove (6).

Before starting we note again that we are only counting $\frac{\log n}{\sqrt{n}}$-good Type-III spheres in this section, i.e., we are not assuming that the spheres are *Voronoi* spheres.

The reason for setting up our analysis to allow us to dispense with the assumption of 'Voronoiness' is that this makes the analysis much easier. This was the motivation for introducing the concepts of x-good and x-bad spheres.

5.1. *Sphere center* p outside or on $\mathcal{P}$

If p is *outside or on* $\mathcal{P}$, let $p'=\mathrm{NN}(p,\mathcal{P})$. The convexity of $\mathcal{P}$ guarantees that p' is unique. Let $S=S(p,r)$ be a $\frac{\log n}{\sqrt{n}}$-good Type-III sphere with two points of S_n on its boundary. For $p'\notin\mathrm{Skel}(\mathcal{P})$, let F

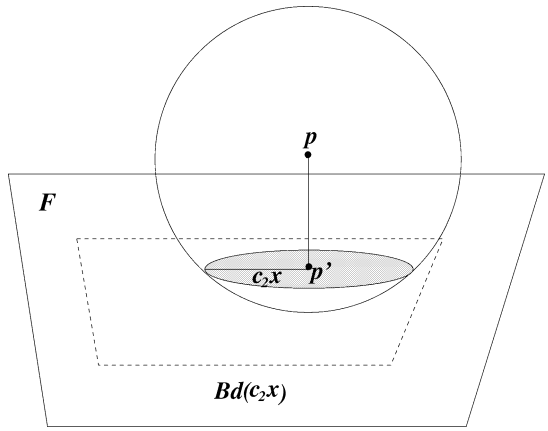

Fig. 9. Case 1 for x-good Type-III spheres with p outside or on $\mathcal{P}$. Notice that the intersection of S with $\mathcal{P}$ is a disk completely contained in F. If the intersection contains a part of some other face then the intersection disk on F would have to grow to be so big that S would no longer be x-good. This is a consequence of p' being at least distance c_2x from the border.

be the unique face of $\mathcal{P}$ such that $p' \in F$ and Π is F's supporting plane. Note that in this case $B = S \cap \Pi$ is a closed disk on Π with center $p' \in F$; let r' be the radius of this disk. Then $B = D_\Pi(p', r')$.

Now set $c_2 = \frac{2}{c_1\sqrt{\pi}}$ where c_1 is the constant defined in Lemma 5. If $p' \notin \mathrm{Bd}(c_2 \log n/\sqrt{n})$, then $d(p', \mathrm{Skel}(\mathcal{P})) > c_2 \log n/\sqrt{n}$. Thus Lemma 5 states that if S intersects any other face of $\mathcal{P}$ then

$$D_\Pi\left(p', \frac{1}{\sqrt{\pi}}\frac{\log n}{\sqrt{n}}\right) \subseteq S \cap \mathcal{P}.$$

Since

$$\mathrm{Area}\left(D_\Pi\left(p', \frac{1}{\sqrt{\pi}}\frac{\log n}{\sqrt{n}}\right)\right) = \frac{\log^2 n}{n},$$

this implies that if $p' \notin \mathrm{Bd}(c_2 \log n/\sqrt{n})$ and S intersects some other face of $\mathcal{P}$ besides F then S is a $\frac{\log n}{\sqrt{n}}$-bad sphere.

Our approach is to divide the problem into three cases.

Case 1. $p' \notin \mathrm{Bd}(\frac{c_2 \log n}{\sqrt{n}})$ (Fig. 9).
Case 2. $p' \in \mathrm{Bd}(\frac{c_2 \log n}{\sqrt{n}})$ but $p' \notin \mathrm{Skel}(\mathcal{P})$ (Fig. 10).
Case 3. $p' \in \mathrm{Skel}(\mathcal{P})$ (Fig. 11).

We now work through the cases.

Case 1. $p' \notin \mathrm{Bd}(\frac{c_2 \log n}{\sqrt{n}})$.

Let $p' \notin \mathrm{Bd}(c_2 \log n/\sqrt{n})$. Since we are only counting good spheres, the discussion above shows that $S \cap \mathcal{P} \subseteq F$, i.e., S does not intersect any other face of $\mathcal{P}$. But then S is a Type-I sphere and does not need to be examined here.

Case 2. $p' \in \mathrm{Bd}(c_2 \log n/\sqrt{n})$ but $p' \notin \mathrm{Skel}(\mathcal{P})$.

This case is illustrated by Fig. 10. The analysis is based on the following lemma:

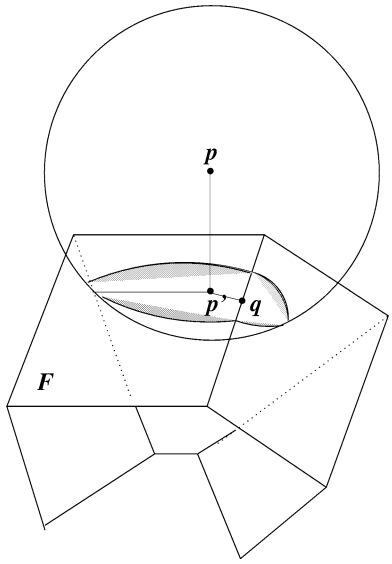

Fig. 10. Case 2 for x-good Type-III spheres with p outside or on $\mathcal{P}$. In this case, $p' \in \mathrm{Bd}(c_2 x)$ but $p' \notin \mathrm{Skel}(\mathcal{P})$. Let $q \in \mathrm{Skel}(\mathcal{P})$ be a nearest neighbor to p' on $\mathrm{Skel}(\mathcal{P})$. Notice that, in this example, the center of the disk formed by the intersection of S with the supporting plane of the second face (i.e. the face not containing p') is not on that face.

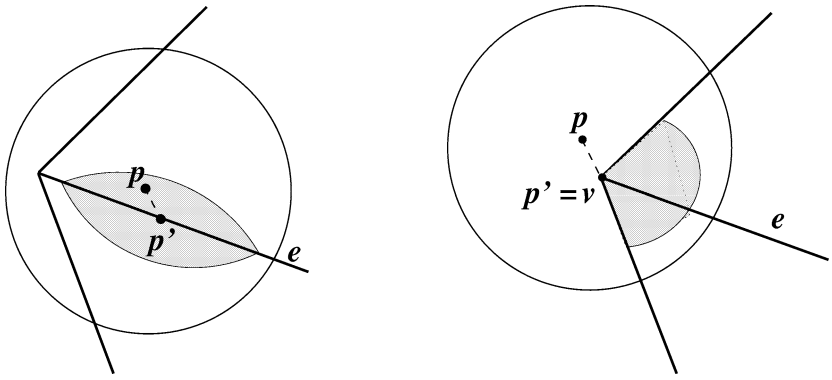

(a) $p' = \mathrm{NN}(p, \mathcal{P})$ is on an edge e (b) $p' = \mathrm{NN}(p, \mathcal{P})$ is a vertex v

Fig. 11. Case 3 for x-good Type-III spheres with p outside or on $\mathcal{P}$.

Lemma 9. *If $p' \in \mathrm{Bd}(c_2 \log n/\sqrt{n})$ but $p' \notin \mathrm{Skel}(\mathcal{P})$, then $\exists q$ on some edge of $\mathcal{P}$, q dependent upon p, such that if $u \in S \cap \mathcal{P}$ then $d(u, q) \leqslant c_3 \frac{\log n}{\sqrt{n}}$ where $c_3 = c_0 + c_2$ (c_0 is the constant introduced in Definition* 9).

Proof. Let r and r' be, respectively, the radii of S and B. The $\frac{\log n}{\sqrt{n}}$-goodness of S implies $r' < c_0 \frac{\log n}{\sqrt{n}}$ since otherwise, from Definition 9,

$$\mathrm{Area}(S \cap \mathcal{P}) \geqslant \mathrm{Area}\big(D_{\Pi}(p', r') \cap F\big) \geqslant \left(\frac{\log n}{\sqrt{n}}\right)^2,$$

contradicting the definition of a good sphere. Let $q \in \mathrm{Skel}(\mathcal{P})$ be a nearest neighbor to p' on $\mathrm{Skel}(\mathcal{P})$. Since $p' \in \mathrm{Bd}(c_2 \log n/\sqrt{n})$, $d(p', q) \leqslant c_2 \frac{\log n}{\sqrt{n}}$.

We will now show that for $u \in S \cap \mathcal{P}$, $d(u, p') \leqslant r'$. Then the lemma will follow since

$$d(u, q) \leqslant d(u, p') + d(p', q) \leqslant r' + c_2 \frac{\log n}{\sqrt{n}} \leqslant (c_0 + c_2) \frac{\log n}{\sqrt{n}} = c_3 \frac{\log n}{\sqrt{n}},$$

where $c_3 = c_0 + c_2$.

First note that since p is outside $\mathcal{P}$, the convexity of $\mathcal{P}$ and $p' = \mathrm{NN}(p, \mathcal{P})$ together imply $\angle pp'u \geqslant 90°$. The law of cosines states

$$d(p', u)^2 + d(p, p')^2 - d(p, u)^2 = 2d(p', u)d(p, p') \cos \angle pp'u.$$

Thus, using the fact that $d(p, p')^2 + (r')^2 = r^2$,

$$\begin{aligned} d(p', u)^2 &= d(p, u)^2 - d(p, p')^2 + 2d(p', u)d(p, p') \cos \angle pp'u \\ &\leqslant r^2 - d(p, p')^2 + 2d(p', u)d(p, p') \cos \angle pp'u \\ &= (r')^2 + 2d(p', u)d(p, p') \cos \angle pp'u \leqslant (r')^2, \end{aligned}$$

so $d(u, p') \leqslant r'$ and we are done. □

We can use this lemma to show that the expected total number of combinatorially different $\frac{\log n}{\sqrt{n}}$-good Type-III spheres $S(p, r)$ with $p' \in \mathrm{Bd}(c_2 \log n/\sqrt{n})$ but $p' \notin \mathrm{Skel}(\mathcal{P})$ is $\mathrm{o}(n)$:

Let L be the total length of all of the edges of $\mathcal{P}$. We partition up the edges of P into $\mathrm{O}(L/\frac{\log n}{\sqrt{n}})$ line segments each of length $\leqslant \frac{\log n}{\sqrt{n}}$, e.g., all segments will have length $\frac{\log n}{\sqrt{n}}$ except for, possibly, one segment per edge (which contains one of that edge's endpoints).

Now let s be any edge segment and $N(s) = \{u \in \mathcal{P}\colon\ d(u, s) \leqslant c_3 \frac{\log n}{\sqrt{n}}\}$ be the set of all points on $\mathcal{P}$ within distance $c_3 \frac{\log n}{\sqrt{n}}$ of s. For any sphere center p let q be the corresponding edge point defined by Lemma 9 and s the segment that q belongs to. From Lemma 9 and the definition of $N(s)$, the two points of S_n that define a $\frac{\log n}{\sqrt{n}}$-good sphere $S(p, r)$ must be in $N(s)$ so the *total* number of combinatorially different $\frac{\log n}{\sqrt{n}}$-good spheres $S(p, r)$ such that p correspond to some point $q \in s$ is bounded from above by $|N(s) \cap S_n|^2$.

Now

$$\mathrm{Area}(N(s)) \leqslant c_3' \left(\frac{\log n}{\sqrt{n}} \right)^2 = c_3' \frac{\log^2 n}{n}$$

for some constant c_3' dependent only upon $\mathcal{P}$. Plugging into the Poisson distribution (with rate n) we find from Lemma 3 that $E(|N(s) \cap S_n|^2) = \mathrm{O}(\log^4 n)$. Thus, for a fixed segment s on $\mathrm{Skel}(\mathcal{P})$, the expected total number of $\frac{\log n}{\sqrt{n}}$-good Type-III spheres $S(p, r)$ such that $\mathrm{NN}(p, \mathcal{P}) = p' \notin \mathrm{Skel}(\mathcal{P})$ and $\mathrm{NN}(p', \mathrm{Skel}(\mathcal{P})) \in s$ is $\mathrm{O}(\log^4 n)$.

But *every* $\frac{\log n}{\sqrt{n}}$-good Type-III sphere $S(p, r)$ with $\mathrm{NN}(p, \mathcal{P}) = p' \notin \mathrm{Skel}(\mathcal{P})$ must have *some* interval s' such that $\mathrm{NN}(p', \mathrm{Skel}(\mathcal{P})) \in s'$. So the total expected number of spheres of this type is bounded from above by the number of such segments times $\mathrm{O}(\log^4 n)$. That is, $\mathrm{O}(L/\frac{\log n}{\sqrt{n}}) \times \mathrm{O}(\log^4 n) = \mathrm{O}(\sqrt{n} \log^3 n) = \mathrm{o}(n)$. This shows that the expected total number of $\frac{\log n}{\sqrt{n}}$-good Type-III spheres $S(p, r)$ with $p' \notin \mathrm{Skel}(\mathcal{P})$ is $\mathrm{o}(n)$ and we have completed Case 2.

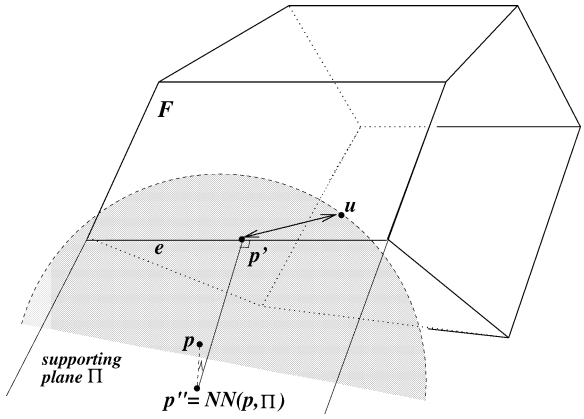

Fig. 12. Good Type-III sphere S with p outside $\mathcal{P}$. In this case no matter how large the radius of S is, the area of the intersection of S with $\mathcal{P}$ can be arbitrarily small. This means that even if S is a good sphere, it is quite possible that the points in $S \cap F$ are very far away from p'', the center of the disk $B = S \cap \Pi$. For example, in this figure, we are not able to bound $d(p', u)$ for $u \in B \cap F$.

Case 3. $p' \in \mathrm{Skel}(\mathcal{P})$ (Fig. 11).

Note that this case differs in a major way from that of Case 2. This is because, unlike in Case 2, the line pp' here is not necessarily perpendicular to the plane Π. This means that $\mathrm{NN}(p, \Pi) \neq p'$ so p' is not the center of the disk $B = S \cap \Pi$. Consequently, even if S is $\frac{\log n}{\sqrt{n}}$-good it is quite possible that the points in $S \cap F$ are very far away from p'', the center of B. This can occur because, even if B is quite large, the intersection $B \cap F$ can be quite small. This, for example, means that we can not use the triangle inequality in the same way as we did in Case 2, since we will not be able to bound $d(p', u)$ for $u \in B \cap F$. See Fig. 12.

To sidestep the difficulties caused by these differences we introduce the following definition:

Definition 13. For $p' \in \mathrm{Skel}(\mathcal{P})$ define

$$M(p') = \Big\{q \in \mathcal{P}\colon\ q \in S(p, r) \text{ for some } \tfrac{\log n}{\sqrt{n}}\text{-good sphere } S(p, r) \\ \text{such that } p \text{ is } \textit{outside } \mathcal{P} \text{ and } p' = \mathrm{NN}(p, \mathcal{P})\Big\}.$$

For s a segment of an edge in $\mathrm{Skel}(\mathcal{P})$,

$$M(s) = \bigcup_{p' \in s} M(p').$$

These definitions will be useful since they will permit us to restrict the number of Voronoi spheres associated with a segment; by partitioning $\mathrm{Skel}(\mathcal{P})$ into a small number of appropriately sized segments we will be able to bound the expected number of spheres in Case 3.

Our goal will be to prove that $\mathrm{Area}(M(s))$ is small. If we can do this then we will be able to use the technique at the end of Case 2 to show that the expected number of $\frac{\log n}{\sqrt{n}}$-good Type-III spheres with $p' \in \mathrm{Skel}(\mathcal{P})$ is small. The important thing to keep in mind when reading the lemmas and proofs is that points in $M(s)$ might actually be quite far from s. We will therefore need something stronger than the triangle inequality to reach our goal. This will be:

Lemma 10. *Let s be a segment of an edge e in* $\mathrm{Skel}(\mathcal{P})$ *with* $\mathrm{length}(s) \leqslant \frac{\log n}{\sqrt{n}}$. *Then*

$$\mathrm{Area}\big(M(s)\big) \leqslant c_4 \frac{\log^3 n}{n}$$

for some c_4 dependent only upon $\mathcal{P}$.

The proof of this lemma is a relatively straightforward but quite long case-by-case analysis that examines the different possible ways in which a sphere $S = S(p, r)$ with p outside $\mathcal{P}$ and $\mathrm{NN}(p, \mathcal{P}) \in \mathrm{Skel}(\mathcal{P})$ can intersect $\mathcal{P}$. The complete proof can be found in [10].

Using an analysis very similar to that performed at the end of Case 2 we will now see why this lemma implies that the expected number of $\frac{\log n}{\sqrt{n}}$-good Type-III spheres $S(p, r)$ with $p' = \mathrm{NN}(p, \mathcal{P}) \in \mathrm{Skel}(\mathcal{P})$ is $\mathrm{o}(n)$.

Let L be the total length of all of the edges of $\mathcal{P}$. We partition up the edges of P into $\mathrm{O}(L/\frac{\log n}{\sqrt{n}})$ line segments each of length $\leqslant \frac{\log n}{\sqrt{n}}$, e.g., all segments will have length $\frac{\log n}{\sqrt{n}}$ except for, possibly, one segment per edge (which contains one of that edge's endpoints).

For any sphere center p, let $p' = \mathrm{NN}(p, \mathcal{P}) \in \mathrm{Skel}(\mathcal{P})$ and let s be the segment such that $p' \in s$. By the definition of $M(s)$, the two points of S_n that define a $\frac{\log n}{\sqrt{n}}$-good sphere $S(p, r)$ must be in $M(s)$, so the *total* number of $\frac{\log n}{\sqrt{n}}$-good spheres $S(p, r)$ such that $\mathrm{NN}(p, \mathcal{P}) = p'$ is bounded from above by $|M(s) \cap S_n|^2$.

Lemma 10 tells us that $\mathrm{Area}(M(s)) \leqslant c_4 \frac{\log^3 n}{n}$ for some constant c_4 dependent only upon $\mathcal{P}$. Plugging into the Poisson distribution (with rate n) we find from Lemma 3 that $E(|M(s) \cap S_n|^2) = \mathrm{O}(\log^6 n)$. Thus, for a fixed segment s on $\mathrm{Skel}(\mathcal{P})$, the expected total number of $\frac{\log n}{\sqrt{n}}$-good Type-III spheres $S(p, r)$ such that $\mathrm{NN}(p, \mathcal{P}) = p' \in s$ is $\mathrm{O}(\log^6 n)$.

But *every* $\frac{\log n}{\sqrt{n}}$-good Type-III sphere $S(p, r)$ with $\mathrm{NN}(p, \mathcal{P}) \in \mathrm{Skel}(\mathcal{P})$ must have $\mathrm{NN}(p, \mathcal{P}) \in s'$ for *some* interval s', so the total expected number of spheres of this type is bounded from above by the number of such segments times $\mathrm{O}(\log^6 n)$. That is, $\mathrm{O}(L/\frac{\log n}{\sqrt{n}}) \times \mathrm{O}(\log^6 n) = \mathrm{O}(\sqrt{n} \log^5 n) = \mathrm{o}(n)$. This shows that the expected total number of combinatorially different $\frac{\log n}{\sqrt{n}}$-good Type-III spheres $S(p, r)$ with $\mathrm{NN}(p, \mathcal{P}) \in \mathrm{Skel}(\mathcal{P})$ is $\mathrm{o}(n)$. This concludes the analyses of Case 3.

Combining the proven $\mathrm{o}(n)$ bounds for Case 1, Case 2 and Case 3, we see that the expected total number of $\frac{\log n}{\sqrt{n}}$-good Type-III spheres $S(p, r)$ with *p outside or on $\mathcal{P}$* is $\mathrm{o}(n)$ and we are done with this part.

5.2. *Sphere center p* inside $\mathcal{P}$

We have just analyzed the number of $\frac{\log n}{\sqrt{n}}$-good Type-III spheres $S = S(p, r)$ when p is *outside* or on $\mathcal{P}$. In this subsection we analyze the case when p is *inside* $\mathcal{P}$. In this case, from the definition of Type-III spheres, we know that $\exists$ a face F of $\mathcal{P}$, such that $F \cap S \neq \emptyset$ but $p'' = \mathrm{NN}(p, \Pi)$ is not in F, where Π is the supporting plane of F.

The lemma we use here is

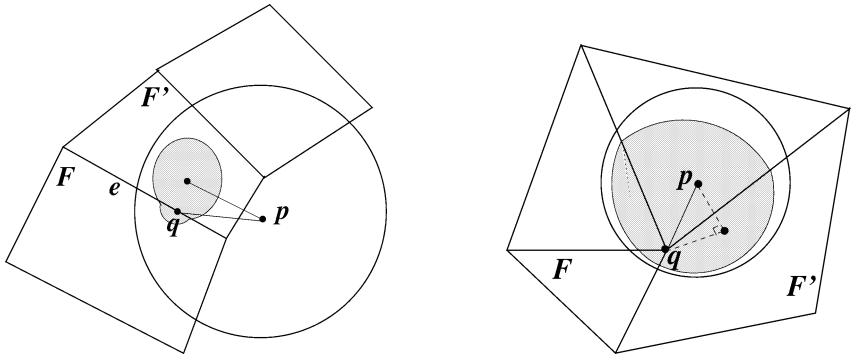

(a) $q = \mathrm{NN}(p, F)$ is on the edge e (b) $q = \mathrm{NN}(p, F)$ is a vertex

Fig. 13. Type-III spheres $S = S(p, r)$ with p *inside* $\mathcal{P}$. Note that the nearest neighbor of p in F is q which is on the boundary of F. The line segment pq is not perpendicular to F which implies that the center of the intersection disk of S with the supporting plane of F is not in F.

Lemma 11. *Let $S = S(p, r)$ be a $\frac{\log n}{\sqrt{n}}$-good sphere with p inside $\mathcal{P}$. Furthermore, suppose $\exists$ a face F of $\mathcal{P}$, such that $F \cap S \neq \emptyset$ but $p'' = \mathrm{NN}(p, \Pi)$ is not in F, where Π is the supporting plane of F. Then $\exists q$ on the boundary of F such that, $\forall u \in S(p, r)$, $d(q, u) \leqslant c_5 \frac{\log n}{\sqrt{n}}$, where c_5 is dependent only upon $\mathcal{P}$.*

The proof of this lemma involves showing that if $S(p, r)$ satisfies the given conditions then r is actually some small multiple of $\frac{\log n}{\sqrt{n}}$, so the distance between q, the nearest point to p on F, and any point in $S(p, r)$ is $\leqslant c_5 \frac{\log n}{\sqrt{n}}$. As in the proof of Lemma 10, the proof of Lemma 11 is a relatively straightforward but quite long case-by-case analysis that examines the different possible ways in which a sphere of the given type can intersect $\mathcal{P}$. The complete proof can again be found in [10].

Now, given Lemma 11, we can use *exactly* the same type of segment partitioning analysis as was employed at the end of Case 2 of Section 5.1 (note the similarity of Lemma 11 to Lemma 9) to show that the expected number of $\frac{\log n}{\sqrt{n}}$-good Type-III spheres $S(p, r)$ with p *inside* $\mathcal{P}$ is $\mathrm{o}(n)$. Combined with the previous subsection this shows that total expected number of all combinatorially different $\frac{\log n}{\sqrt{n}}$-good Type-III spheres is $\mathrm{o}(n)$ and we are done.

6. Review and open problems

In this paper we proved that if points S_n were chosen from the surface of a convex polytope $\mathcal{P}$ with a Poisson process of rate n then the expected complexity of the Voronoi diagram of S_n, i.e., the expected number of Voronoi vertices, edges and faces, is $\mathrm{O}(n)$. Equivalently, the expected complexity of the dual of the Voronoi diagram, the Delaunay triangulation, is $\mathrm{O}(n)$. This means that the expected number of Delaunay tetrahedra, faces and edges is $\mathrm{O}(n)$.

As stated in the first section, for reasons of mathematical simplicity we proved our result for the Poisson distribution but the result will still hold if the n points are chosen IID from the uniform distribution over the surface of $\mathcal{P}$. That is, for n points chosen IID from the uniform distribution over $\mathcal{P}$ the expected complexity of their Voronoi diagram is also $\mathrm{O}(n)$.

To the best of our knowledge this is the first analysis of the expected complexity of the 3-dimensional Delaunay triangulation of points chosen from any 2-dimensional surface. In fact, the problem of analyzing the complexity in average or worst case for such points, seems quite a new problem with the only known results being the very recent ones of Attali and Boissonnat [1] and Erickson [8] who discuss the worst case complexity when n points are 'well-sampled' from certain types of surfaces. Attali and Boissonnat show that in their case the complexity is $O(n^{7/4})$. Erickson proves that there is a set of n points on the cylinder with Voronoi complexity $\Omega(n^{3/2})$.

This paucity of research is probably due to the fact that it is only relatively recently that the practical problem of constructing Voronoi diagrams for such point sets has become important in the general geometric community, e.g. for surface reconstruction and modelling. The lack of work in this area means that most problems remain open. One very general problem would be, *given $\mathcal{M}$, a 2-dimensional manifold in 3-dimensional space, choose a set of points from the Poisson distribution with rate n over $\mathcal{M}$ or a set of n points IID from the uniform distribution over $\mathcal{M}$. Give an expression for how the complexity of the Voronoi diagram grows as a function of n.* Of course, this growth would depend upon the particular manifold $\mathcal{M}$; an interesting problem would be to attack this problem for different classes of $\mathcal{M}$. In this paper we solved this problem for the class $\mathcal{M}$ of boundaries of convex polytope. Another extension would be to fix $\mathcal{M}$, and do the analysis for different distributions over $\mathcal{M}$ that are not uniform but depend somehow on features of $\mathcal{M}$, e.g., its curvature.

We end with a few more comments on our results. Our analysis was only of the *expected* complexity of the Voronoi diagram. It said nothing about how *concentrated* the complexity is around its $O(n)$ mean. We state without proof the fact that it is possible to straightforwardly modify our results to show that if points are chosen from the Poisson distribution with rate n over convex polytope $\mathcal{P}$ then *the probability that the complexity of the Voronoi diagram is greater than $n \log^2 n$ is $n^{-\Omega(\log n)}$.* (The $n \log^2 n$ is quite loose and it is very possible that it can be improved. We do not prove this concentration theorem here because this paper is already quite long and introducing this new analysis would not introduce any new techniques or ideas, just many new long equations.)

Finally, we discuss a possible different approach towards solving our problem. An upper level view of our analysis is that we bounded the complexity of the Voronoi diagram of point set S_n by partitioning the Voronoi spheres into two parts and bounding each part separately. The first part consisted of spheres whose centers are outside the polytope or inside the polytope but very close to the edges. We showed that the expected number of such spheres is $o(n)$, i.e. very small. The second part consisted of those spheres whose centers were inside the polytope and not that close to the edges. The number of such spheres was the dominant term. We analyzed this number by working backwards, and identifying where such spheres could intersect the polytope on a particular face. Given the intersection region we then identified which points, both on that face and other faces, could be on the border of a sphere without causing the sphere's intersection with $\mathcal{P}$ to be so large that it must contain some points and therefore not be a Voronoi sphere.

Although we did not mention it at the time, there is another way of attempting to attack the enumeration of the second type of Voronoi spheres. Let p be a point inside of $\mathcal{P}$ and $r_p = d(p, \mathcal{P})$. The *Medial Axis* of polytope $\mathcal{P}$ is the set of points p inside $\mathcal{P}$ such that the sphere $S(p, r_p)$ touches at least two points of $\mathcal{P}$. Intuitively, if a point p is very far from the medial axis then any sphere $S(p, r)$ that intersects two or more faces of $\mathcal{P}$ would have to intersect at least one of them in a large area and therefore is likely to contain points from S_n so the sphere is not a Voronoi sphere. Thus, at least intuitively, the centers of Voronoi spheres should be concentrated along the medial axis. This phenomenon is actually observable in Fig. 1.

Another way of attempting to enumerate the second type of Voronoi spheres might be to use the above observation as follows: (i) prove that the probability of a Voronoi sphere center being far from the medial axis is negligible. Then (ii) identify the medial axis of $\mathcal{P}$, partition it into small regions, and for each region enumerate the expected number of Voronoi spheres whose centers are near that region and (iii) add up all of these values. While we did not employ this approach in this paper it might be useful in extensions in which the manifold $\mathcal{M}$ is smooth and our techniques can not be used. We note that Attali and Boissonnat have already used a Medial axis based approach in [1] to achieve their $O(n^{7/4})$ bound.

Acknowledgements

The authors would like to thank Herbert Edelsbrunner who suggested the original line of inquiry that led to this problem. They would also like to thank Hee-Kap Ahn, Sunil Arya, Jean-Daniel Boissonnat, Siu-Wing Cheng, Otfried Cheong, Jeff Erickson, Rudolf Fleischer, Shin Chan-Su and Antoine Vigneron, for various conversations and pointers concerning this problem. They would also like to thank the anonymous referees for their suggestions.

Appendix A. Proof of Lemma 1

In this appendix we sketch the proof of Lemma 1 which states that if S_n is a set of points chosen from the standard 2-dimensional Poisson distribution on $\mathcal{P}$ with rate n then

$$\Pr\bigl(\text{there exists a } \tfrac{\log n}{\sqrt{n}}\text{-}\textit{bad} \text{ combinatorial Voronoi sphere of } S_n\bigr) = n^{-\Omega(\log n)}. \tag{43}$$

Recall that in this equation *Voronoi sphere* refers to a combinatorial sphere $\mathcal{X}(s,t)$ and not a physical sphere.

We will assume that $\mathrm{Area}(\mathcal{P}) = 1$; if not, then scaling $\mathcal{P}$ so that its area is 1 will enable us to prove the lemma.

Until stated otherwise we will change our distribution and assume that $S_n = \{p_1, p_2, \ldots, p_n\}$ are n points chosen IID from the uniform distribution over $\mathcal{P}$. For distinct 4-tuples $i_1, i_2, i_3, i_4 \in \{1, 2, \ldots, n\}$, let $S(p_{i_1}, p_{i_2}, p_{i_3}, p_{i_4})$ be the unique sphere that has the p_{i_j} on its boundary. Then set

$$A(p_{i_1}, p_{i_2}, p_{i_3}, p_{i_4}) = \mathrm{Area}\bigl(S(p_{i_1}, p_{i_2}, p_{i_3}, p_{i_4}) \cap \mathcal{P}\bigr).$$

The probability of 5 points from this distribution being cospherical is 0 so, with probability 1, sphere $S(p_{i_1}, p_{i_2}, p_{i_3}, p_{i_4})$ is a Voronoi sphere if and only if $S(p_{i_1}, p_{i_2}, p_{i_3}, p_{i_4}) \cap (S_n \setminus \{p_{i_1}, p_{i_2}, p_{i_3}, p_{i_4}\}) = \emptyset$.

Note that the event $A(p_{i_1}, p_{i_2}, p_{i_3}, p_{i_4}) \geqslant \frac{\log^2 n}{n}$ is measurable so

$$\begin{aligned}
&\Pr\bigl(S(p_{i_1}, p_{i_2}, p_{i_3}, p_{i_4}) \text{ is a Voronoi sphere and } A(p_{i_1}, p_{i_2}, p_{i_3}, p_{i_4}) \geqslant \tfrac{\log^2 n}{n}\bigr)\\
&\quad = \Pr\bigl(A(p_{i_1}, p_{i_2}, p_{i_3}, p_{i_4}) \geqslant \tfrac{\log^2 n}{n}\bigr)\\
&\qquad \times \Pr\bigl(S(p_{i_1}, p_{i_2}, p_{i_3}, p_{i_4}) \text{ is a Voronoi sphere} \mid A(p_{i_1}, p_{i_2}, p_{i_3}, p_{i_4}) \geqslant \tfrac{\log^2 n}{n}\bigr)\\
&\quad \leqslant \Pr\bigl(S(p_{i_1}, p_{i_2}, p_{i_3}, p_{i_4}) \text{ is a Voronoi sphere} \mid A(p_{i_1}, p_{i_2}, p_{i_3}, p_{i_4}) \geqslant \tfrac{\log^2 n}{n}\bigr)\\
&\quad \leqslant \bigl(1 - \tfrac{\log^2 n}{n}\bigr)^{n-4} = n^{-\Omega(\log n)}.
\end{aligned}$$

Let $\mathcal{A}$ be the event that $\exists i_1, i_2, i_3, i_4 \in \{1, 2, \ldots, n\}$ such that $S(p_{i_1}, p_{i_2}, p_{i_3}, p_{i_4})$ is a Voronoi sphere and $A(p_{i_1}, p_{i_2}, p_{i_3}, p_{i_4}) \geqslant \frac{\log^2 n}{n}$. Summing over *all* $\binom{n}{4}$ possible choices of $p_{i_1}, p_{i_2}, p_{i_3}, p_{i_4}$, we have proven that

$$\Pr(\mathcal{A}) \leqslant \binom{n}{4} n^{-\Omega(\log n)} = n^{-\Omega(\log n)}.$$

Now suppose *there exists a* $\frac{\log n}{\sqrt{n}}$-bad *combinatorial Voronoi sphere of* S_n, i.e., $\exists s, t \in S_n$ such that $\mathcal{X}(s,t)$ is a $\frac{\log n}{\sqrt{n}}$-bad combinatorial Voronoi sphere. By the definition of (combinatorial) Voronoi spheres $\mathcal{X}(s,t)$ corresponds to some face F in the Voronoi diagram of S_n. Let v be some vertex of F in the Voronoi diagram (at least one such v must exist) and set $r = d(v,s) = d(v,t)$. By the definition of Voronoi vertices there must be two other points $s', t' \in S_n$ such that $d(v,s') = d(v,t') = r$ and $S(s,t,s',t') = S(v,r)$ is a physical Voronoi sphere, i.e., does not contain any points of S_n in its interior.[4] Then $S(v,r) \in \mathcal{F}(s,t)$. Since $\mathcal{X}(s,t)$ is a $\frac{\log n}{\sqrt{n}}$-bad combinatorial Voronoi sphere, this implies $S(s,t,s',t') = S(v,r)$ is a physical $\frac{\log n}{\sqrt{n}}$-bad Voronoi sphere, i.e., $S(s,t,s',t')$ is a Voronoi sphere and $A(s,t,s',t') \geqslant \frac{\log^2 n}{n}$. This then implies that event $\mathcal{A}$ is true.

We have just shown that the event *there exists a* $\frac{\log n}{\sqrt{n}}$-bad *combinatorial Voronoi sphere of* S_n implies that event $\mathcal{A}$ is true. Since $\Pr(\mathcal{A}) = n^{-\Omega(\log n)}$ we have therefore just proven (43) for n points chosen IID from the uniform distribution over $\mathcal{P}$.

To prove (43) for S_n chosen from the Poisson process with rate n over $\mathcal{P}$ we note that, conditioned on the event $S_n = m$, S_n has the same distribution as m points chosen IID from the uniform distribution over $\mathcal{P}$. This means that, with S_n chosen from the Poisson process we have

$$\begin{aligned}&\Pr\bigl(\text{there exists a } \tfrac{\log n}{\sqrt{n}}\text{-}\textit{bad} \text{ combinatorial Voronoi sphere of } S_n\bigr)\\ &\quad = \sum_{m \geqslant 0} \Pr(S_n = m) m^{-\Omega(\log m)} = n^{-\Omega(\log n)},\end{aligned}$$

where the last equality comes from the fact that

$$\Pr\left(|S_n - n| \geqslant \frac{n}{2}\right) = n^{-\Omega(\log n)}.$$

The proof is completed. □

References

[1] D. Attali, J.-D. Boissonnat, Complexity of the Delaunay triangulation of points on a smooth surface, Preprint, January 2001.

[2] D. Attali, J.-D. Boissonnat, A linear bound on the complexity of the Delaunay triangulation of points on polyhedral surfaces, Submitted to Solid Modeling 2002. Also available at http://www.inria.fr/sophia/prisme/personnel/boissonnat/.

[3] F. Aurenhammer, Power diagrams: properties, algorithms and applications, SIAM J. Computing 16 (1987) 78–96.

[4] Note that $S(s,t,s',t')$ is uniquely defined with probability 1 since four points are cocircular with probability 0.

[4] J.L. Bentley, B.W. Weide, A.C. Yao, Optimal expected-time algorithms for closest point problems, ACM Trans. on Mathematical Software 6 (4) (Dec. 1980) 563–580.
[5] R. Dwyer, Higher-dimensional Voronoi diagrams in linear expected time, Discrete Comput. Geom. 6 (4) (1991) 343–367.
[6] R. Dwyer, The expected number of k-faces of a Voronoi diagram, Computers Math. Applications 26 (5) (1993) 13–19.
[7] H. Edelsbrunner, Algorithms in Combinatorial Geometry, Springer-Verlag, Berlin, 1987.
[8] J. Erickson, Nice point sets can have nasty Delaunay triangulations, in: Proceedings of the 17th Annual ACM Symposium on Computational Geometry, 3–5 June 2001, pp. 96–105.
[9] G.R. Grimmett, D.R. Stirzaker, Probability and Random Processes, 2nd Edition, Clarendon Press, Oxford, 1992.
[10] M. Golin, H.-S. Na, On the proofs of two lemmas describing the intersections of spheres with the boundary of a convex polytope, Hong Kong UST Theoretical Computer Science Center, Technical Report HKUST-TCSC-2001-09, July 2001. Available from http://www.cs.ust.hk/tcsc/RR.
[11] F.P. Preparata, M.I. Shamos, Computational Geometry: An Introduction, Springer-Verlag, New York, 1985.